| REQ'D FOR VARIOUS JIB LENGTHS | | | | |
|---|---|---|---|---|
| ITEM NUMBER | | 63 | 64 (5) | 65 |
| JIB LENGTH | | 20 FT INSERT (6.1m) | 19 FT-2.00 PENDANT (5.8m) | WIRE ROPE TIMBER GUARD |
| FEET | METERS | | | |
| 60 | 18.3 | 1 | 2 | 1 |
| 80 | 24.4 | 2 | 4 | 2 |
| 100 | 30.5 | 3 | 6 | 3 |
| 120 | 36.6 | 4 | 8 | 4 |

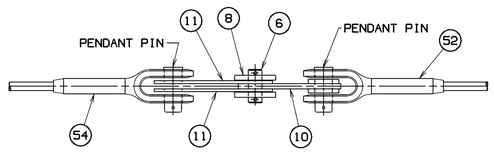


VIEW "C"-"C"
SCALE: 1.50=1FT

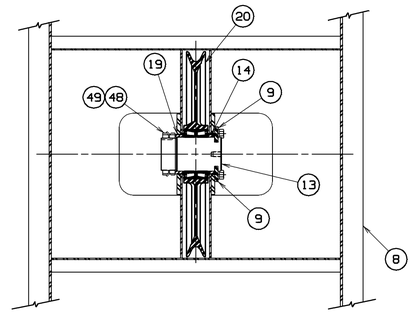


SECTION "B"-"B"
SCALE: 1.50=1FT

(1) APPLY LOCTITE 242 (MANITOWOC NO. 622293) OR EQUIVALENT TO SCREW 614083 AT ASSEMBLY.

(2) ON DWG. 73026

(3) CAN BE USED FOR DEAD END WITH 2 PART LINE. MUST BE REMOVED WHEN 2, 3 OR 4 PART LINE AND/OR UPPER DEAD END LUG IS USED.

(4) TIGHTEN BEARING LOCKNUT (ITEM 48) SUFFICIENTLY TO CLAMP BEARING INNER RACE.

(5) ON DWG. 77535

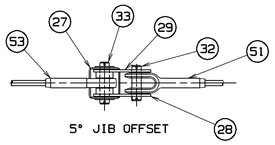


VIEW "E"-"E"
SCALE: 1.50=1FT

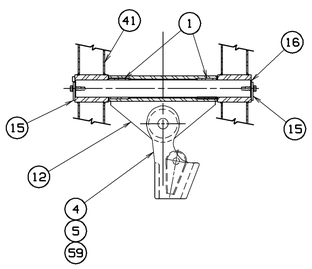


SECTION "F"-"F"
SCALE: 1.50=1FT.
(3)

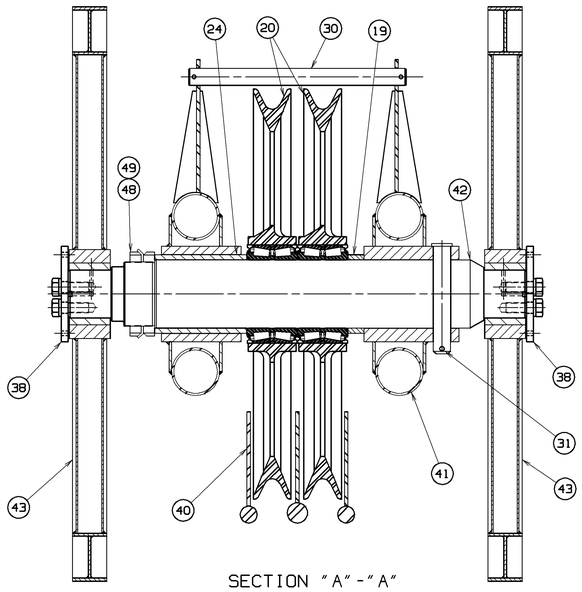


SECTION "A"-"A"
SCALE:3.00=1FT

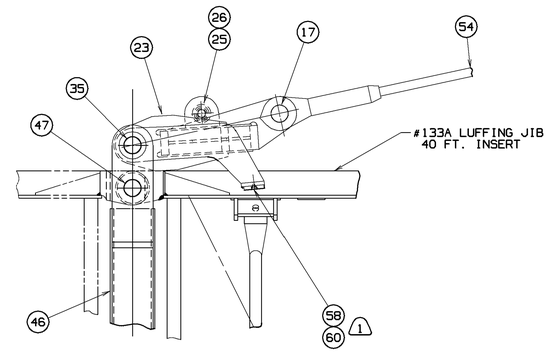


VIEW "D"
SCALE: 1.50=1FT

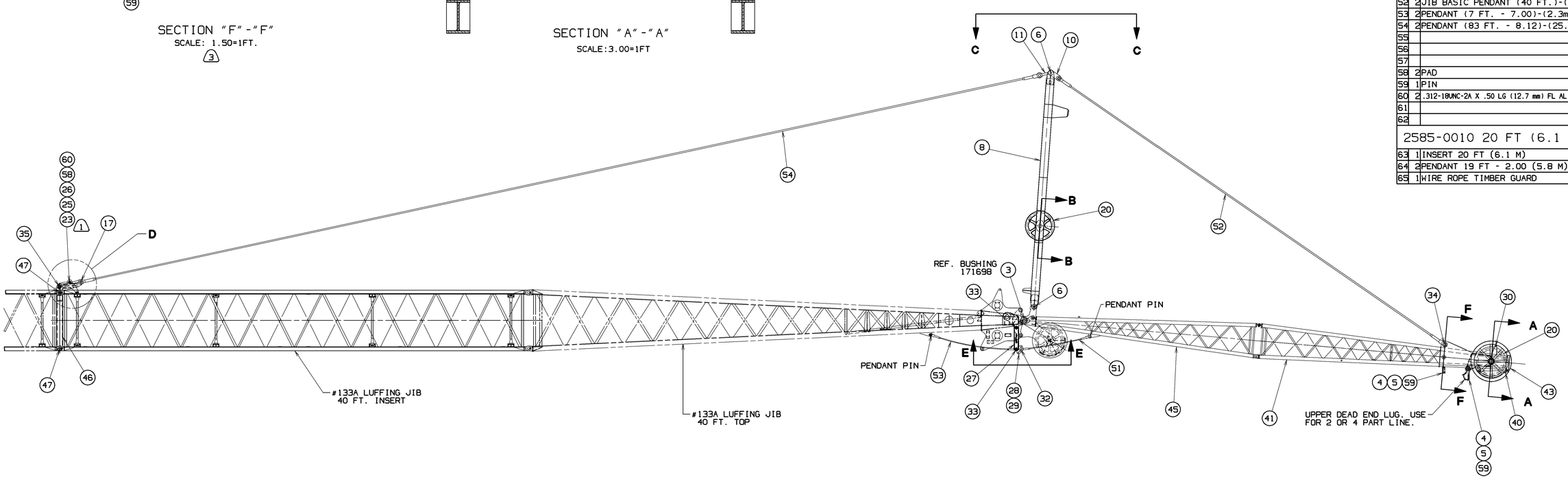


BASIC 40 FT. (12.19m) JIB W/5° OFFSET SHOWN

FIRST ON S.O. 1933

BILL OF MATERIAL

| ITEM NO. | NO. REQD. | DESCRIPTION | MATERIAL | CODE NO. OR DWG. NO. | |
|---|---|---|---|---|---|
| | | 2585-0000 BASIC 40 FT. (12.2 M) JIB ASSEMBLY | | | |
| 1 | 2 | BUSHING | | 18129 | |
| 2 | | | | | |
| 3 | 2 | PIN | | 139102 | |
| 4 | 1 | SOCKET | | 162233 | |
| 5 | 1 | WEDGE | | 162234 | |
| 6 | 4 | PIN | | 166901 | |
| 7 | | | | | |
| 8 | 1 | JIB STRUT (20 FT)-(6.1m) | | 169803 | |
| 9 | 2 | PIN KEEPER | | 169810 | |
| 10 | 2 | LINK | | 169824 | |
| 11 | 4 | LINK | | 169825 | |
| 12 | 1 | DEAD END BAIL | | 169832 | 3 |
| 13 | 1 | PIN | | 169836 | |
| 14 | 1 | SPACER | | 169837 | |
| 15 | 2 | END PLATE | | 169838 | |
| 16 | 1 | PIN | | 169846 | 3 |
| 17 | 2 | PIN | | 169849 | |
| 18 | | | | | |
| 19 | 2 | SPACER | | 170677 | |
| 20 | 3 | SHEAVE ASSEMBLY FOR 1.125 WIRE ROPE | | 171250 | |
| 21 | | | | | |
| 22 | | | | | |
| 23 | 1 | BACKSTAY SUPPORT | | 192327 | |
| 24 | 1 | SPACER | | 171845 | |
| 25 | 2 | ROLLER | | 171848 | |
| 26 | 1 | SHAFT | | 171849 | |
| A 27 | 1 | STRUT | | 192488 | A |
| 28 | 2 | LINK | | 171857 | |
| 29 | 2 | LINK | | 171858 | |
| 30 | 1 | ROPE GUARD | | 171863 | |
| 31 | 1 | PIN | | 171864 | |
| 32 | 2 | PIN | | 171867 | |
| 33 | 4 | PIN | | 171868 | |
| 34 | 2 | PIN | | 171869 | |
| 35 | 2 | PIN | | 171870 | |
| 36 | | | | | |
| 37 | | | | | |
| 38 | 2 | END PLATE | | 172110 | |
| 39 | | | | | |
| 40 | 1 | ROPE GUARD | | 172222 | |
| 41 | 1 | JIB TOP (20 FT)-(6.1m) | | 172680 | |
| 42 | 1 | SHAFT | | 179171 | |
| 43 | 2 | WHEEL ASSEMBLY | | 179175 | |
| 44 | | | | | |
| 45 | 1 | JIB BUTT #140 (20 FT)- (6.1m) | | 192318 | |
| 46 | 2 | LINK | | 192340 | |
| 47 | 4 | BOOM JOINT PIN | | 192366 | |
| 48 | 4 | BEARING LOCKNUT | | 225105 | 4 |
| 49 | 2 | BEARING LOCKWASHER | | 225111 | |
| 50 | | | | | |
| 51 | 2 | PENDANT (6 FT. - 0.00)-(1.8m) | | 276785 | 2 |
| 52 | 2 | JIB BASIC PENDANT (40 FT.)-(12-19m) | | 276935 | 5 |
| 53 | 2 | PENDANT (7 FT. - 7.00)-(2.3m) | | 277317 | 2 |
| 54 | 2 | PENDANT (83 FT. - 8.12)-(25.5m) | | 277469 | 5 |
| 55 | | | | | |
| 56 | | | | | |
| 57 | | | | | |
| 58 | 2 | PAD | | 554165 | |
| 59 | 1 | PIN | | 563960 | |
| 60 | 2 | .312-18UNC-2A X .50 LG (12.7 mm) FL AL HD CAPSCR | | 614083 | 1 |
| 61 | | | | | |
| 62 | | | | | |
| | | 2585-0010 20 FT (6.1 M) INSERT | | | |
| 63 | 1 | INSERT 20 FT (6.1 M) | | 172679 | |
| 64 | 2 | PENDANT 19 FT - 2.00 (5.8 M) | | 277360 | 5 |
| 65 | 1 | WIRE ROPE TIMBER GUARD | | 171477 | |

ASSEMBLIES USED ON

REVISIONS
A 6-16-98 DW WAS 171850

DWG. NO. 192320

| | | | |
|---|---|---|---|
| THIS PRINT REMAINS THE PROPERTY OF MANITOWOC CRANES, INC. ALL INFORMATION CONTAINED THEREON IS CONFIDENTIAL. IT IS LOANED, SUBJECT TO RETURN UPON DEMAND. AND ON EXPRESS CONDITION THAT IT IS NOT TO BE COPIED OR USED DIRECTLY OR INDIRECTLY IN ANY WAY WHATSOEVER DETRIMENTAL TO OUR INTERESTS. | TOLERANCE UNLESS OTHERWISE SPECIFIED<br>DECIMAL PLACES — FABRICATION: ± 10 FEET, > 10 FEET — MACHINING<br>(1) PLACE 0.0 ±.120 ±.180 ±.030<br>(2) PLACE 0.00 ±.060 ±.120 ±.015<br>(3) PLACE 0.000 ±.005<br>ANGLES ±1°30' ±0°30'<br>MACHINING TOLERANCE APPLIES TO THE DIMENSION AT THE FINISHED SURFACE | SCALE .31=1FT<br>DR. DW<br>CK. DP<br>APP GMP | Manitowoc Cranes, Inc.<br>Manitowoc, Wisconsin<br>MODEL 2250 | JIB ASSEMBLY<br>#140 JIB<br>1.25 SWAGED PENDANTS | DATE 4-28-98<br>PATTERN NO.<br>DWG. NO. 192320 |

DO NOT SCALE THIS DRAWING