NATIONAL CRANE® by Manitowoc

NBT40-1 Series

NBT36-1/NBT40-1/NBT45-1 Product Guide

ASME B30.5 & CSA Z150 • Imperial 85%
ANSI/SAIA A92.2 & CSA C225 Aerial Lift

Features

- NBT36-1: 32,7 t (36 USt) rating
- NBT40-1: 36,3 t (40 USt) rating
- NBT45-1: 40,8 t (45 USt) rating
- Compliant to aerial lift standards for personnel handling
- Multiple boom length options 31,4 m - 49,1 m (103 ft- 161 ft)
- 862 kg (1900 lb) tailswing counterweight

NBT40-1 SERIES

The NBT40-1 series delivers full capacity lifting and a high performance aerial lift configuration for ultimate versatility and jobsite productivity.

Features

> Four or five-section boom

Class-leading 49,1 m (161 ft) boom length on the NBT45-1 allows the operator to perform more lifts without the use of a jib, reducing setup time and improving efficiency. There is no need to swing the jib to reach 62,8 m (206 ft) platform-working height. Optional boom lengths of 31,39 m (103 ft) and 38,71 m (127 ft) and 43,29 m (142 ft) are also available.

> ANSI/SAIA A92.2 & CSA C225 aerial lift and ASME B30.5

100 percent crane and 100 percent aerial lift capacity allow the NBT40-1 Series to deliver outstanding utilization for maximum ROI, making it the ultimate tool for your fleet.

> Graphical Rated Capacity Limiter (RCL)

Graphical RCL simplifies setup in both crane and aerial lift modes. Aerial controls offer quick setup features, real-time feedback of operating range and automatic function slowdowns when approaching the extents of the working range.

> Outriggers

Outrigger spans are 7,52 m (24.7 ft) when fully extended and 5,33 m (17.5 ft) at mid-span. Equipped with both ground level and in-cab outrigger controls, the NBT40-1 Series' outriggers allow quick and easy crane set-up and can be positioned at 0 percent, 50 percent and 100 percent.

> Options and Lift Solutions

- Aerial lift package
- Platform hydraulic tool circuit with pressure intensifier manifold
- Auxiliary hoist
- Wind speed sensor (readout available in operator cab and aerial lift platform)
- Five-function radio remotes
- K100™ synthetic rope

Lift Solutions™

Jobsite benefits

Performance you can rely on

- Multiple boom options and 100 percent aerial and lifting capabilities make the NBT40-1 Series extremely versatile and boosts your ROI
- New decking and ladders for easier access
- Lighter polymeric outrigger floats are easier and lighter than traditional floats
- Ergonomic cab and radio remote controls
- Utilization enhancing options such as the 2-stage jib, personnel platforms and wireless radio remotes for optimum versatility

Manitowoc Crane Care™

Manitowoc Crane Care when you need it.
The assurance of the world's most advanced crane service and support to get you back to work fast.

Manitowoc Finance™

Manitowoc Finance helps you get right to work generating profits for your business.
Financial tools that help you capitalize on opportunity with solutions that fit your needs.

Contents

Dimensions and weights

Standard torsion box

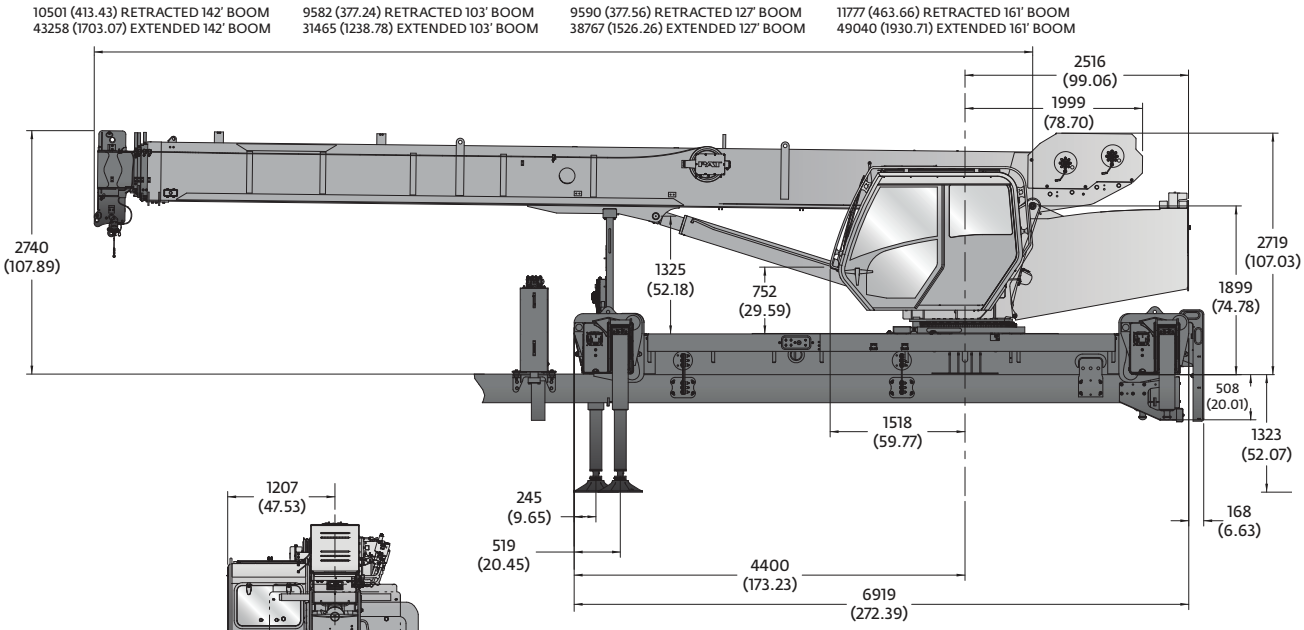

Dimensions are in mm (inches) unless otherwise specified.

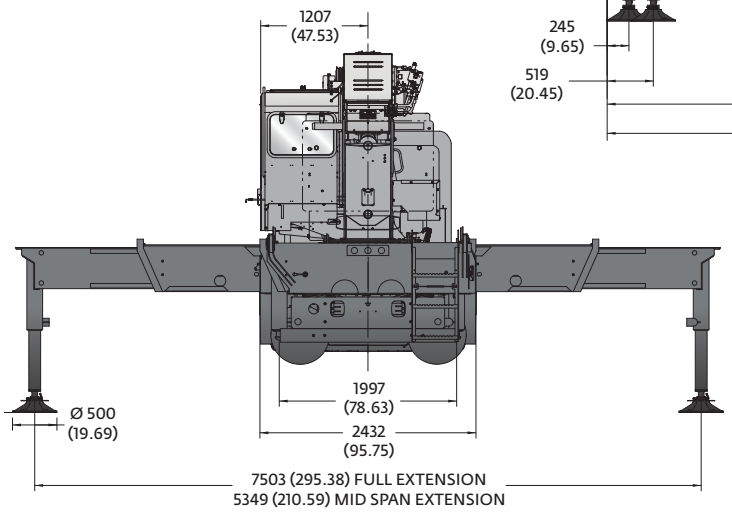

Standard		
Series	**Weight**	**CG**
NBT36-103	15 210 kg (33,533 lb)	2161 mm (85.06 in)
NBT36-127	15 805 kg (34,843 lb)	2245 mm (88.40 in)
NBT40-103	16 176 kg (35 661 lb)	1911 mm (75.24 in)
NBT40-127	16 770 kg (36,971 lb)	2000 mm (78.74 in)
NBT40-142	17 210 kg (37,942 lb)	2145 mm (84.44 in)
NBT45-103	17 748 kg (39,128 lb)	1525 mm (60.03 in)
NBT45-127	18 342 kg (40,438 lb)	1618 mm (63.72 in)
NBT45-142	18 782 kg (41,409 lb)	1760 mm (69.29 in)
NBT45-161	19 408 kg (42,787 lb)	1995 mm (78.53 in)

Does not include: jib, no auxiliary hoist, with 2/3 hook block.
Includes: polymeric outrigger pads and wire rope.

Dimensions and weights

Extended torsion box

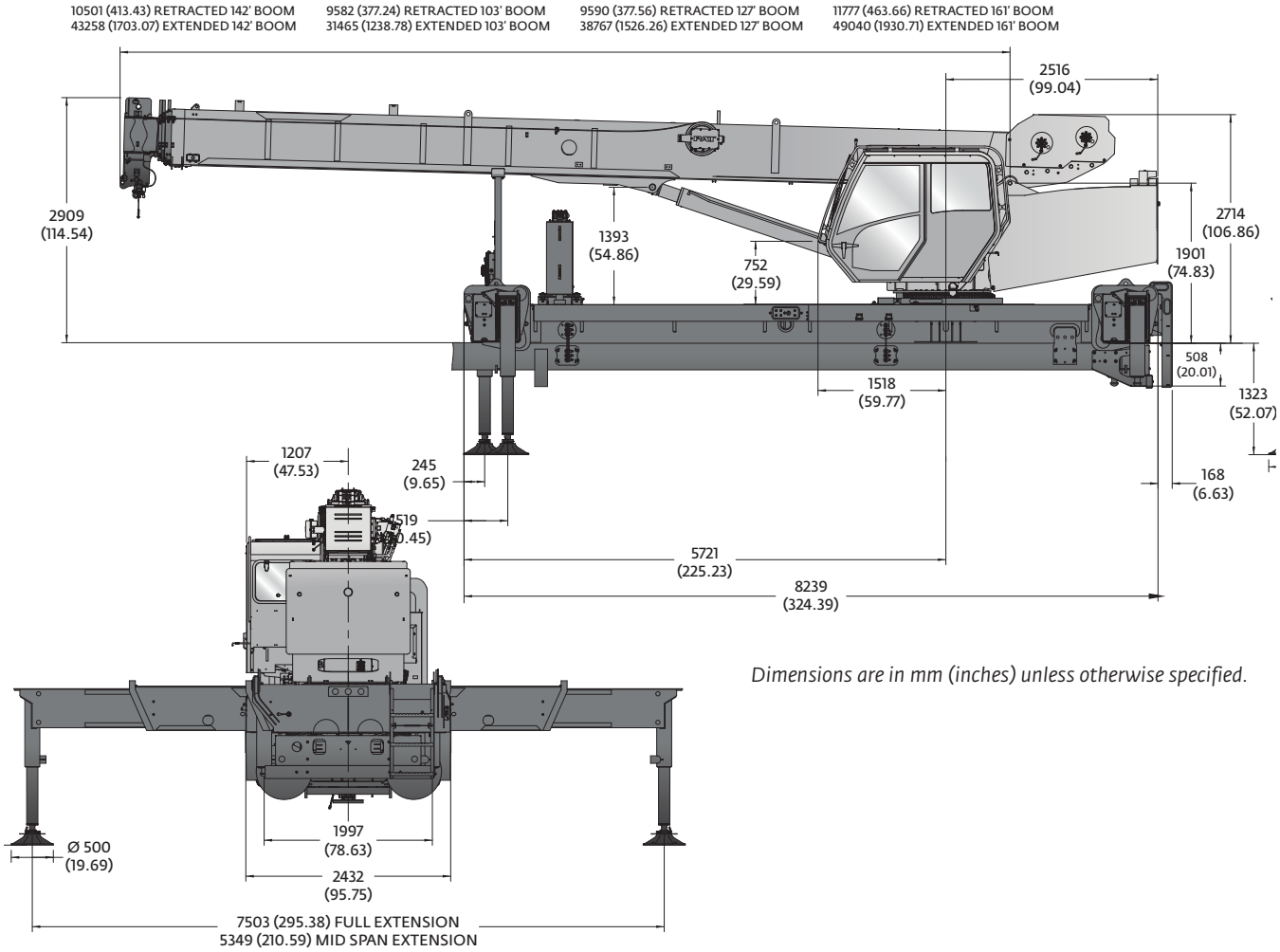

Dimensions are in mm (inches) unless otherwise specified.

Extended		
Series	**Weight**	**CG**
NBT36-103	-	-
NBT36-127	-	-
NBT40-103	-	-
NBT40-127	17 130 kg (37,765 lb)	2264 mm (89.15 in)
NBT40-142	17 570 kg (38,736 lb)	2400 mm (94.47 in)
NBT45-103	-	-
NBT45-127	18 703 kg (41,232 lb)	1868 mm (73.55 in)
NBT45-142	19 142 kg (42,203 lb)	2001 mm (78.79 in)
NBT45-161	19 768 kg (43 581 lb)	2224 mm (87.56 in)

Does not include: jib, no auxiliary hoist, with 2/3 hook block.
Includes: polymeric outrigger pads and wire rope.

Recommended truck specifications

Configurations NBT36-1 standard torsion box

The configurations are based on the NBT36-1 with an 85% stability factor. The complete unit must be installed in accordance with factory requirements and a test performed to determine actual stability and counterweight requirements since individual truck chassis vary.

NBT36103-1 Standard T-Box Recommended Truck:

Working area: 360°
Gross Axle Weight Rating Front: 9072 kg (20,000 lb)
Gross Axle Weight Rating Rear: 20,865 kg (46,000 lb)
Wheelbase: 655 cm (258 in)
Cab to trunnion (CT): 459 cm (181 in)
Frame Strength: 785 MPa (110,000 PSI)
Frame Section Modulus (SM), front axle to end of AF: 426 cm3 (30.0 in3)

Bare Truck Weight, Front: 4853 kg (10,700 lb)
Bare Truck Weight, Rear: 3864 kg (8,520 lb)

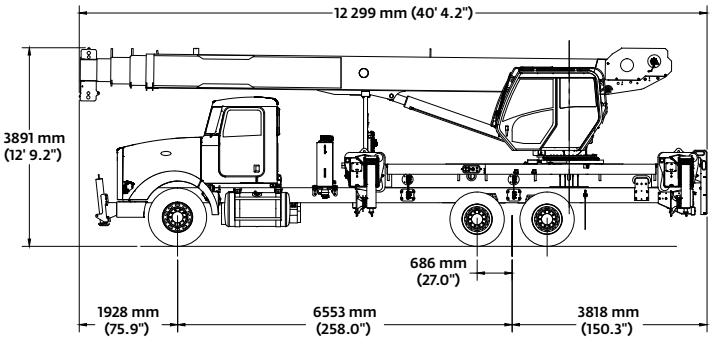

This configuration shows the 360° working area that is achieved with the front stabilizer (standard on the NBT36-1) and AWMCWT option. Extended front rails required for SFO installation unless application without extended rails has been approved by National Crane.
Note: Bare truck weights prior to installation of crane assembly for 85% stability.

NBT36127-1 Standard T-Box Recommended Truck:

Working area: 360°
Gross Axle Weight Rating Front: 9072 kg (20,000 lb)
Gross Axle Weight Rating Rear: 20,865 kg (46,000 lb)
Wheelbase: 655 cm (258 in)
Cab to trunnion (CT): 459 cm (181 in)
Frame Strength: 785 MPa (110,000 PSI)
Frame Section Modulus (SM), front axle to end of AF: 426 cm3 (30.0 in3)

Bare Truck Weight, Front: 4853 kg (10,700 lb)
Bare Truck Weight, Rear: 3864 kg (8520 lb)

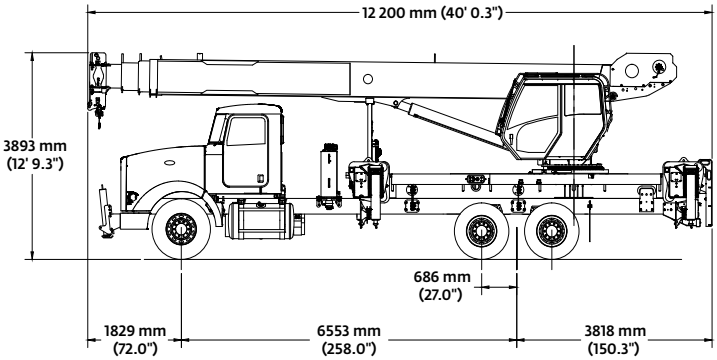

This configuration shows the 360° working area that is achieved with the front stabilizer (standard on the NBT36-1). Extended front rails required for SFO installation unless application without extended rails has been approved by National Crane.
Note: Bare truck weights prior to installation of crane assembly for 85% stability.

Other configurations are available, please consult the factory for more information.
Please refer to page 51 of this product guide for important notes regarding the recommended truck specifications.

Recommended truck specifications

Configurations NBT40-1 standard torsion box

The configurations are based on the NBT40-1 with an 85% stability factor. The complete unit must be installed in accordance with factory requirements and a test performed to determine actual stability and counterweight requirements since individual truck chassis vary.

NBT40103-1 Standard T-Box Recommended Truck:

Working area: 360°
Gross Axle Weight Rating Front: 9072 kg (20,000 lb)
Gross Axle Weight Rating Rear: 20,865 kg (46,000 lb)
Pusher Axle Weight Rating: 5987 kg (13,200 lb)
Wheelbase: 701 cm (276 in)
Cab to trunnion (CT): 505 cm (199 in)
Frame Strength: 785 MPa (110,000 PSI)
Frame Section Modulus (SM), front axle to end of AF: 426 cm3 (30.0 in3)
Bare Truck Weight, Front: 4780 kg (10,540 lb)
Bare Truck Weight, Rear: 4545 kg (10,020 lb)

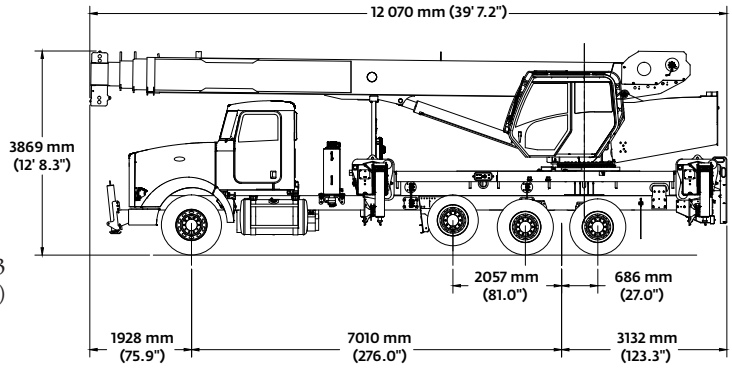

This configuration shows the 360° working area that is achieved with the front stabilizer (standard on the NBT40-1). Extended front rails required for SFO installation unless application without extended rails has been approved by National Crane.
Note: Bare truck weights prior to installation of crane assembly for 85% stability.

NBT40127-1 Standard T-Box Recommended Truck:

Working area: 360°
Gross Axle Weight Rating Front: 9072 kg (20,000 lb)
Gross Axle Weight Rating Rear: 20,865 kg (46,000 lb)
Pusher Axle Weight Rating: 5987 kg (13,200 lb)
Wheelbase: 701 cm (276 in)
Cab to trunnion (CT): 505 cm (199 in)
Frame Strength: 785 MPa (110,000 PSI)
Frame Section Modulus (SM), front axle to end of AF: 426 cm3 (30.0 in3)
Bare Truck Weight, Front: 4780 kg (10,540 lb)
Bare Truck Weight, Rear: 4545 kg (10,020 lb)

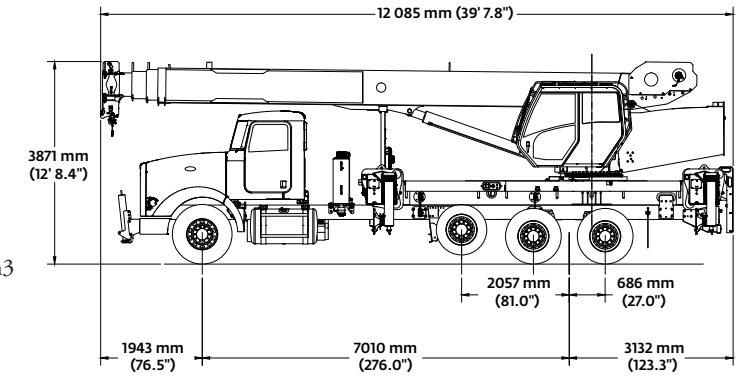

This configuration shows the 360° working area that is achieved with the front stabilizer (standard on the NBT40-1). Extended front rails required for SFO installation unless application without extended rails has been approved by National Crane.
Note: Bare truck weights prior to installation of crane assembly for 85% stability.

NBT40142-1 Standard T-Box Recommended Truck:

Working area: 360°
Gross Axle Weight Rating Front: 9072 kg (20,000 lb)
Gross Axle Weight Rating Rear: 20,865 kg (46,000 lb)
Pusher Axle Weight Rating: 5987 kg (13,200 lb)
Wheelbase: 701 cm (276 in)
Cab to trunnion (CT): 505 cm (199 in)
Frame Strength: 785 MPa (110,000 PSI)
Frame Section Modulus (SM), front axle to end of AF: 426 cm3 (30.0 in3)
Bare Truck Weight, Front: 4780 kg (10,540 lb)
Bare Truck Weight, Rear: 4545 kg (10,020 lb)

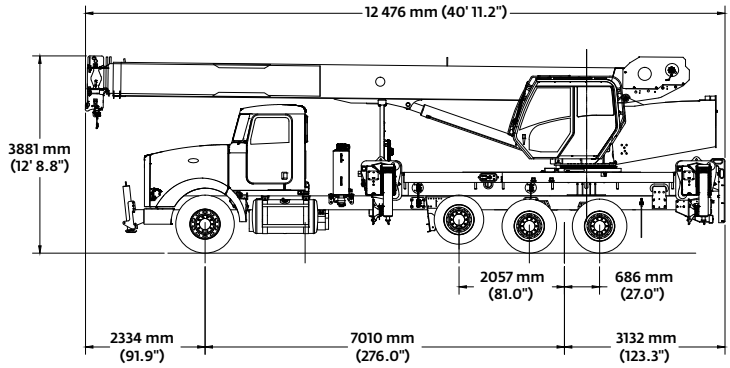

This configuration shows the 360° working area that is achieved with the front stabilizer (standard on the NBT40-1). Extended front rails required for SFO installation unless application without extended rails has been approved by National Crane.
Note: Bare truck weights prior to installation of crane assembly for 85% stability.

Other configurations are available, please consult the factory for more information.
Please refer to page 51 of this product guide for important notes regarding the recommended truck specifications.

Configurations NBT45-1 standard torsion box

The configurations are based on the NBT45-1 with an 85% stability factor. The complete unit must be installed in accordance with factory requirements and a test performed to determine actual stability and counterweight requirements since individual truck chassis vary.

NBT45103-1 Standard T-Box Recommended Truck:

Working area: 360°
Gross Axle Weight Rating Front: 9072 kg (20,000 lb)
Gross Axle Weight Rating Rear: 20,865 kg (46,000 lb)
Tag Axle Weight Rating: 5987 kg (13,200 lb)
Wheelbase: 625 cm (246 in)
Cab to trunnion (CT): 429 cm (169 in)
Frame Strength: 785 MPa (110,000 PSI)
Frame Section Modulus (SM), front axle to end of AF: 426 cm3 (30.0 in3)
Bare Truck Weight, Front: 4336 kg (9560 lb)
Bare Truck Weight, Rear: 4989 kg (11,000 lb)

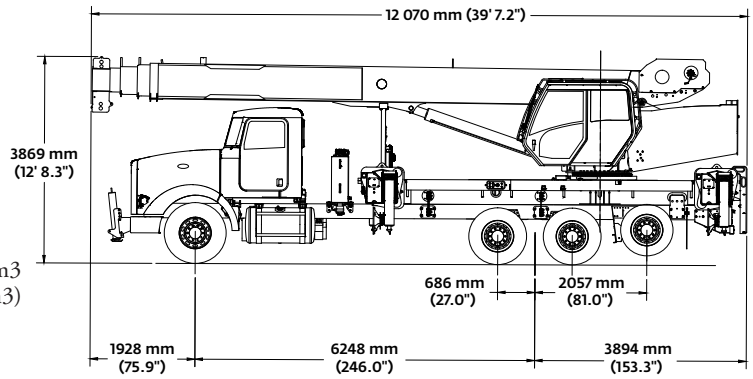

This configuration shows the 360° working area that is achieved with the front stabilizer (standard on the NBT45-1). Extended front rails required for SFO installation unless application without extended rails has been approved by National Crane.
Note: Bare truck weights prior to installation of crane assembly for 85% stability.

NBT45127-1 Standard T-Box Recommended Truck:

Working area: 360°
Gross Axle Weight Rating Front: 9072 kg (20,000 lb)
Gross Axle Weight Rating Rear: 20,865 kg (46,000 lb)
Tag Axle Weight Rating: 5987 kg (13,200 lb)
Wheelbase: 625 cm (246 in)
Cab to trunnion (CT): 429 cm (169 in)
Frame Strength: 785 MPa (110,000 PSI)
Frame Section Modulus (SM), front axle to end of AF: 426 cm3 (30.0 in3)
Bare Truck Weight, Front: 4336 kg (9560 lb)
Bare Truck Weight, Rear: 4989 kg (11,000 lb)

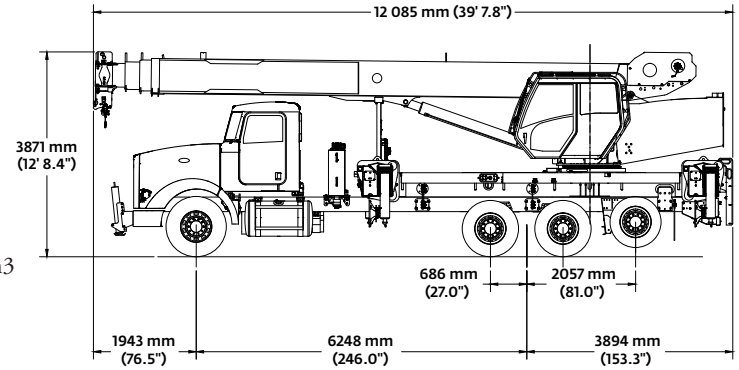

This configuration shows the 360° working area that is achieved with the front stabilizer (standard on the NBT45-1). Extended front rails required for SFO installation unless application without extended rails has been approved by National Crane.
Note: Bare truck weights prior to installation of crane assembly for 85% stability.

Other configurations are available, please consult the factory for more information.
Please refer to page 51 of this product guide for important notes regarding the recommended truck specifications.

Recommended truck specifications

Configurations NBT45-1 standard torsion box

The configurations are based on the NBT45-1 with an 85% stability factor. The complete unit must be installed in accordance with factory requirements and a test performed to determine actual stability and counterweight requirements since individual truck chassis vary.

NBT45142-1 Standard T-Box Recommended Truck:

Working area: 360°
Gross Axle Weight Rating Front: 9072 kg (20,000 lb)
Gross Axle Weight Rating Rear: 20,865 kg (46,000 lb)
Tag Axle Weight Rating: 5987 kg (13,200 lb)
Wheelbase: 625 cm (246 in)
Cab to trunnion (CT): 429 cm (169 in)
Frame Strength: 785 MPa (110,000 PSI)
Frame Section Modulus (SM), front axle to end of AF: 426 cm3 (30.0 in3)
Bare Truck Weight, Front: 4336 kg (9560 lb)
Bare Truck Weight, Rear: 4989 kg (11,000 lb)

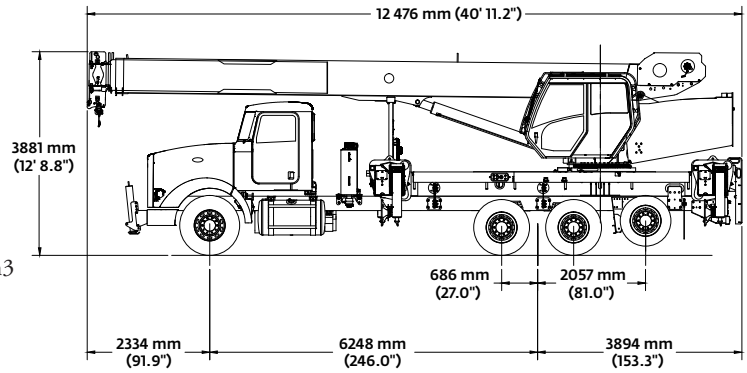

This configuration shows the 360° working area that is achieved with the front stabilizer (standard on the NBT45-1). Extended front rails required for SFO installation unless application without extended rails has been approved by National Crane.
Note: Bare truck weights prior to installation of crane assembly for 85% stability.

NBT45161-1 Standard T-Box Recommended Truck:

Working area: 360°
Gross Axle Weight Rating Front: 9072 kg (20,000 lb)
Gross Axle Weight Rating Rear: 20,865 kg (46,000 lb)
Tag Axle Weight Rating: 5987 kg (13,200 lb)
Wheelbase: 673 cm (265 in)
Cab to trunnion (CT): 477 cm (188 in)
Frame Strength: 785 MPa (110,000 PSI)
Frame Section Modulus (SM), front axle to end of AF: 426 cm3 (30.0 in3)
Bare Truck Weight, Front: 4336 kg (9560 lb)
Bare Truck Weight, Rear: 4989 kg (11,000 lb)

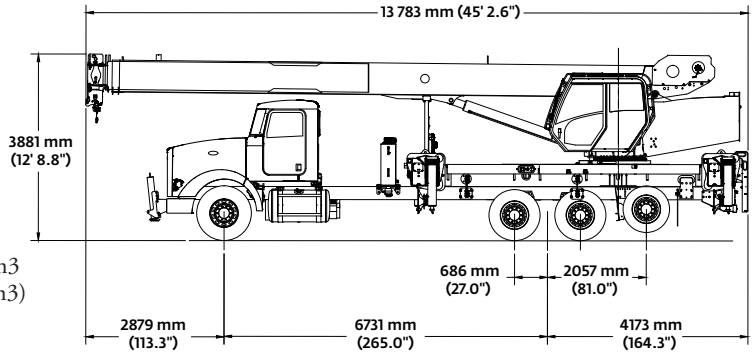

This configuration shows the 360° working area that is achieved with the front stabilizer (standard on the NBT45-1). Extended front rails required for SFO installation unless application without extended rails has been approved by National Crane.
Note: Bare truck weights prior to installation of crane assembly for 85% stability.

Other configurations are available, please consult the factory for more information.
Please refer to page 51 of this product guide for important notes regarding the recommended truck specifications.

Configurations NBT40-1 extended torsion box

The configurations are based on the NBT40-1 with an 85% stability factor. The complete unit must be installed in accordance with factory requirements and a test performed to determine actual stability and counterweight requirements since individual truck chassis vary.

NBT40127-1 Extended T-Box Recommended Truck:

Working area: 360°
Gross Axle Weight Rating Front: 9072 kg (20,000 lb)
Gross Axle Weight Rating Rear: 20,865 kg (46,000 lb)
Pusher Axle Weight Rating: 5987 kg (13,200 lb)
Wheelbase: 762 cm (300 in)
Cab to trunnion (CT): 566 cm (223 in)
Frame Strength: 785 MPa (110,000 PSI)
Frame Section Modulus (SM), front axle to end of AF: 426 cm3 (30.0 in3)

Bare Truck Weight, Front: 4762 kg (10,500 lb)
Bare Truck Weight, Rear: 5685 kg (10,330 lb)

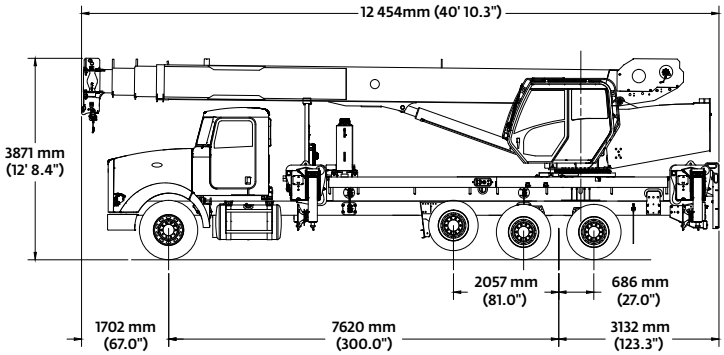

This configuration shows the 360° working area achieved with the EXTB torsion box and RC1000 options.
Note: Bare truck weights prior to installation of crane assembly for 85% stability.

NBT40127-1 Extended T-Box Recommended Truck:

Working area: 360°
Gross Axle Weight Rating Front: 9072 kg (20,000 lb)
Gross Axle Weight Rating Rear: 20,865 kg (46,000 lb)
Pusher Axle Weight Rating: 5987 kg (13,200 lb)
Wheelbase: 762 cm (300 in)
Cab to trunnion (CT): 566 cm (223 in)
Frame Strength: 785 MPa (110,000 PSI)
Frame Section Modulus (SM), front axle to end of AF: 426 cm3 (30.0 in3)

Bare Truck Weight, Front: 4762 kg (10,500 lb)
Bare Truck Weight, Rear: 5685 kg (10,330 lb)

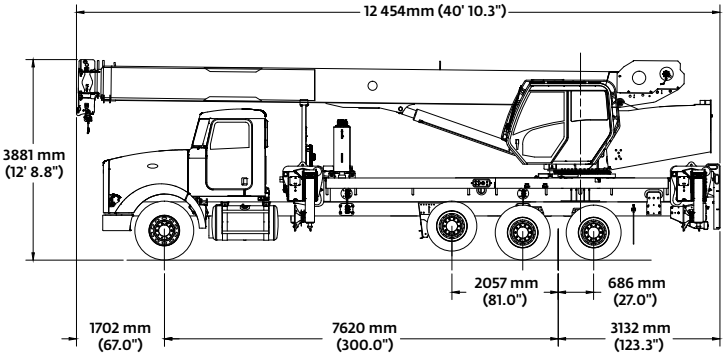

This configuration shows the 360° working area achieved with the EXTB torsion box option.
Note: Bare truck weights prior to installation of crane assembly for 85% stability.

Other configurations are available, please consult the factory for more information.
Please refer to page 51 of this product guide for important notes regarding the recommended truck specifications.

Recommended truck specifications

Configurations NBT45-1 extended torsion box

The configurations are based on the NBT45-1 with an 85% stability factor. The complete unit must be installed in accordance with factory requirements and a test performed to determine actual stability and counterweight requirements since individual truck chassis vary.

NBT45127-1 Extended T-Box Recommended Truck:

Working area: 360°
Gross Axle Weight Rating Front: 9072 kg (20,000 lb)
Gross Axle Weight Rating Rear: 20,865 kg (46,000 lb)
Tag Axle Weight Rating: 5987 kg (13,200 lb)
Wheelbase: 685 cm (270 in)
Cab to trunnion (CT): 490 cm (193 in)
Frame Strength: 785 MPa (110,000 PSI)
Frame Section Modulus (SM), front axle to end of AF: 426 cm3 (30.0 in3)

Bare Truck Weight, Front: 4436 kg (9780 lb)
Bare Truck Weight, Rear: 5012 kg (11,050 lb)

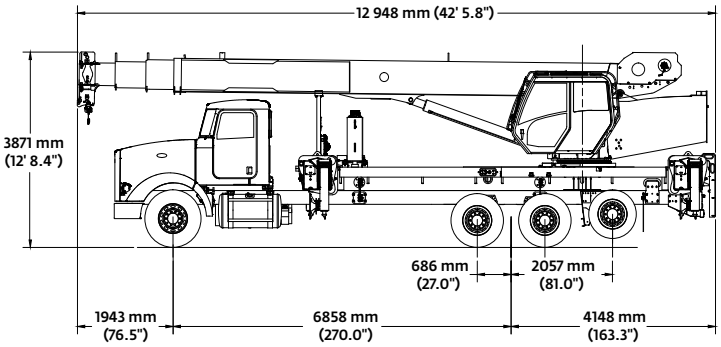

This configuration shows the 360° working area achieved with the EXTB torsion box option.
Note: Bare truck weights prior to installation of crane assembly for 85% stability.

NBT45142-1 Extended T-Box Recommended Truck:

Working area: 360°
Gross Axle Weight Rating Front: 9072 kg (20,000 lb)
Gross Axle Weight Rating Rear: 20,865 kg (46,000 lb)
Tag Axle Weight Rating: 5987 kg (13,200 lb)
Wheelbase: 685 cm (270 in)
Cab to trunnion (CT): 490 cm (193 in)
Frame Strength: 785 MPa (110,000 PSI)
Frame Section Modulus (SM), front axle to end of AF: 426 cm3 (30.0 in3)

Bare Truck Weight, Front: 4436 kg (9780 lb)
Bare Truck Weight, Rear: 5012 kg (11,050 lb)

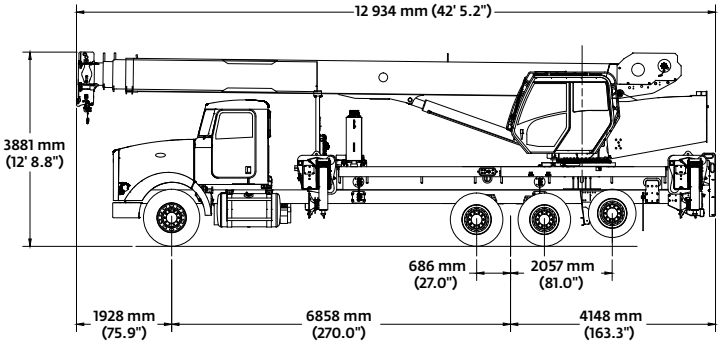

This configuration shows the 360° working area achieved with the EXTB torsion box option.
Note: Bare truck weights prior to installation of crane assembly for 85% stability.

NBT45161-1 Extended T-Box Recommended Truck:

Working area: 360°
Gross Axle Weight Rating Front: 9072 kg (20,000 lb)
Gross Axle Weight Rating Rear: 20,865 kg (46,000 lb)
Tag Axle Weight Rating: 5987 kg (13,200 lb)
Wheelbase: 673 cm (265 in)
Cab to trunnion (CT): 477 cm (188 in)
Frame Strength: 785 MPa (110,000 PSI)
Frame Section Modulus (SM), front axle to end of AF: 426 cm3 (30.0 in3)

Bare Truck Weight, Front: 4336 kg (9,560 lb)
Bare Truck Weight, Rear: 4989 kg (11,000 lb)

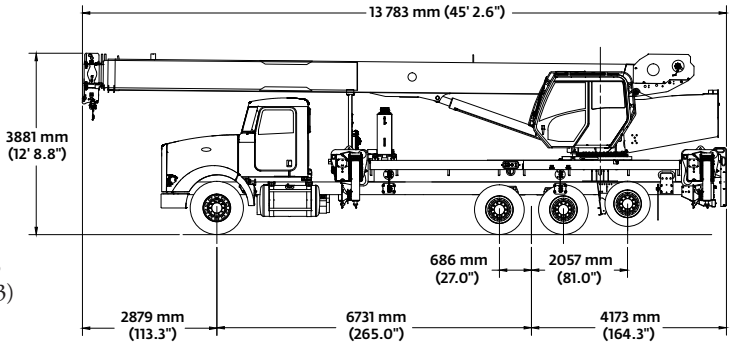

This configuration shows the 360° working area achieved with the EXTB torsion box option.
Note: Bare truck weights prior to installation of crane assembly for 85% stability.

Other configurations are available, please consult the factory for more information.
Please refer to page 51 of this product guide for important notes regarding the recommended truck specifications.

NBT36-1, NBT40-1 and NBT45-1 (103)

31,39 m (103 ft) | 9,45 m - 16,76 m (31 ft - 55 ft) | 7,52 m (24.7 ft) | 360°

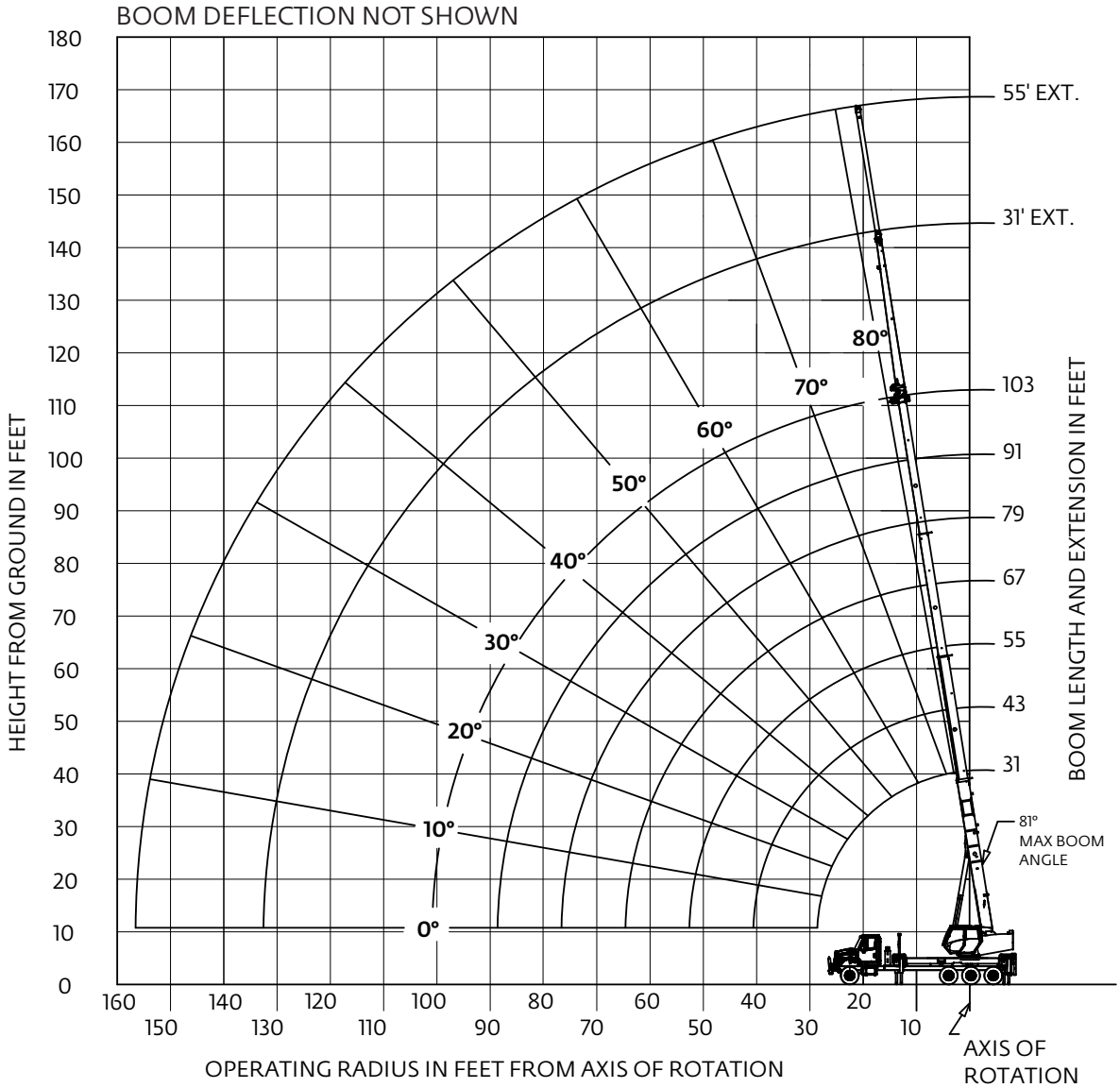

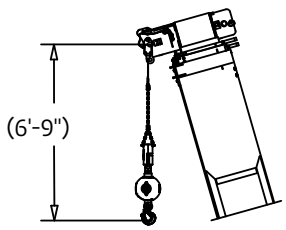

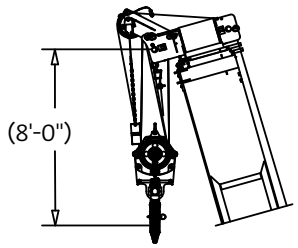

DIMENSIONS ARE FOR LARGEST FURNISHED HOOK BLOCK & HEADACHE BALL, WITH ANTI-TWO BLOCK ACTIVATED.

* DRAWING IS TO SHOW THE PHYSICAL REACH OF THE MACHINE. ALWAYS REFER TO LOAD CHART TO SEE WHAT PORTIONS OF THIS RANGE ARE STRUCTURALLY AND STABILITY LIMITED.

THIS CHART IS ONLY A GUIDE AND SHOULD NOT BE USED TO OPERATE THE CRANE.
The individual crane's load chart, operating instructions and other instructional plates must be read and understood prior to operating the crane.

Load chart

NBT36103-1

9,45 m - 31,39 m (31 ft - 103 ft)

7,52 m (24.7 ft)

360°

Pounds

Radius in Feet	#01						
	Main Boom Length in Feet						
	31	43-A	55-B	67-C	79-D	91-E	103
7	72,000 (73.9)						
8	69,000 (72)	50,000 (76.9)					
10	66,500 (68)	48,000 (74.1)	49,000 (78)				
12	55,000 (63.9)	46,000 (71.2)	46,000 (75.8)	36,000 (78.7)			
15	43,400 (57.5)	43,500 (66.8)	39,000 (72.5)	35,000 (76.1)	31,000 (78.7)		
20	31,300 (45.5)	31,600 (59.1)	31,900 (66.8)	32,000 (71.6)	26,000 (75.1)	18,000 (77.3)	18,000 (79.4)
25	23,900 (29.9)	24,200 (50.6)	24,500 (60.8)	24,700 (66.9)	24,800 (71.2)	17,500 (74.2)	17,000 (76.8)
30		18,100 (40.9)	18,350 (54.4)	18,500 (62)	18,650 (67.1)	17,000 (71)	16,000 (74)
35		13,900 (28.6)	14,150 (47.4)	14,300 (56.8)	14,450 (62.9)	14,550 (67.5)	14,500 (71.1)
40			11,250 (39.5)	11,400 (51.3)	11,500 (58.6)	11,600 (63.9)	11,700 (67.9)
45			9200 (31)	9350 (45.9)	9450 (54.5)	9550 (60.5)	9650 (65)
50			7500 (17.4)	7650 (39.4)	7800 (49.7)	7580 (56.6)	7950 (61.7)
55				6350 (31.7)	6450 (44.5)	6550 (52.5)	6600 (58.3)
60				5250 (21.6)	5350 (38.8)	5450 (48.2)	5500 (54.7)
65					4500 (32.3)	4550 (43.6)	4600 (51)
70					3700 (24.2)	3750 (38.6)	3850 (47.1)
75					2950 (11.1)	3050 (32.9)	3150 (43)
80						2450 (26)	2550 (38.4)
85						1950 (16.6)	2000 (33.4)
90							1550 (27.5)
95							1150 (19.9)
100							800 (4.6)
Minimum boom angle (°) for indicated length (no load)							0
Maximum boom length (ft.) at 0° boom angle (no load)							103

NOTE: ( ) Boom angles are in degrees.
#RCL operating code. Refer to RCL manual for operating instructions.

Lifting Capacities at Zero Degree Boom Angle							
Boom Angle	Main Boom Length in Feet						
	31	43-A	55-B	67-C	79-D	91-E	103
0°	18,800 (28.5)	10,500 (40.5)	6700 (52.5)	4400 (64.5)	2750 (76.5)	1600 (88.5)	800 (100.5)

NOTE: ( ) Reference radii in feet. 801 01 798

Rated Load Reductions from main boom capacity when lifting over main boom nose with							
tele. erected (retracted)	2300	2150	2000	1950	1900	1850	1800
31' off. erected at 0° offset	1800	1700	1550	1500	1450	1450	1400

THIS CHART IS ONLY A GUIDE AND SHOULD NOT BE USED TO OPERATE THE CRANE.
The individual crane's load chart, operating instructions and other instructional plates must be read and understood prior to operating the crane.

NBT36103-1

9,45 m - 31,39 m (31 ft - 103 ft)

Stowed

7,52 m (24.7 ft)

360°

Pounds

Radius in Feet	#02						
	Main Boom Length in Feet						
	31	43-A	55-B	67-C	79-D	91-E	103
7	71,200 (73.9)						
8	68,200 (72)	49,350 (76.9)					
10	65,700 (68)	47,350 (74.1)	48,550 (78)				
12	54,200 (63.9)	45,350 (71.2)	45,550 (75.8)	35,600 (78.7)			
15	42,600 (57.5)	42,850 (66.8)	38,550 (72.5)	34,600 (76.1)	30,650 (78.7)		
20	30,500 (45.5)	30,950 (59.1)	31,450 (66.8)	31,600 (71.6)	25,650 (75.1)	17,700 (77.3)	17,750 (79.4)
25	23,100 (29.9)	23,550 (50.6)	24,050 (60.8)	24,300 (66.9)	24,450 (71.2)	17,200 (74.2)	16,750 (76.8)
30		17,450 (40.9)	17,900 (54.4)	18,100 (62)	18,300 (67.1)	16,700 (71)	15,750 (74)
35		13,250 (28.6)	13,700 (47.4)	13,900 (56.8)	14,100 (62.9)	14,250 (67.5)	14,250 (71.1)
40			10,800 (39.5)	11,000 (51.3)	11,150 (58.6)	11,300 (63.9)	11,450 (67.9)
45			8750 (31)	8950 (45.9)	9100 (54.5)	9250 (60.5)	9400 (65)
50			7050 (17.4)	7250 (39.4)	7450 (49.7)	7280 (56.6)	7700 (61.7)
55				5950 (31.7)	6100 (44.5)	6250 (52.5)	6350 (58.3)
60				4850 (21.6)	5000 (38.8)	5150 (48.2)	5250 (54.7)
65					4150 (32.3)	4250 (43.6)	4350 (51)
70					3350 (24.2)	3450 (38.6)	3600 (47.1)
75					2600 (11.1)	2750 (32.9)	2900 (43)
80						2150 (26)	2300 (38.4)
85						1650 (16.6)	1750 (33.4)
90							1300 (27.5)
95							900 (19.9)
100							550 (4.6)
Minimum boom angle (°) for indicated length (no load)							0
Maximum boom length (ft.) at 0° boom angle (no load)							103

NOTE: ( ) Boom angles are in degrees.
#RCL operating code. Refer to RCL manual for operating instructions.

Lifting Capacities at Zero Degree Boom Angle							
Boom Angle	Main Boom Length in Feet						
	31	43-A	55-B	67-C	79-D	91-E	103
0°	18,000 (28.5)	9850 (40.5)	6250 (52.5)	4000 (64.5)	2400 (76.5)	1300 (88.5)	550 (100.5)

NOTE : ( ) Reference radii in feet. 80101799

THIS CHART IS ONLY A GUIDE AND SHOULD NOT BE USED TO OPERATE THE CRANE.
The individual crane's load chart, operating instructions and other instructional plates must be read and understood prior to operating the crane.

Load chart

NBT36103-1

9,45 m - 16,76 m (31 ft - 55 ft)

7,52 m (24.7 ft)

360°

Pounds

Radius in Feet	31 ft LENGTH #03
24	8500 (80)
37	7500 (75)
48	6400 (70)
59	5100 (65)
69	3900 (60)
78	2800 (55)
87	1900 (50)
95	1250 (45)
102	750 (40)
Min. boom angle for indicated length (no load)	37.8°
Max. boom length at 0° boom angle (no load)	79 ft

Radius in Feet	55 ft LENGTH #04
29	4000 (80)
45	3700 (75)
59	3200 (70)
71	2700 (65)
83	2250 (60)
94	1800 (55)
104	1300 (50)
113	800 (45)
Min. boom angle for indicated length (no load)	41.5°
Max. boom length at 0° boom angle (no load)	79 ft

80028776

NOTE: ( ) Boom angles are in degrees.
#RCL operating code. Refer to RCL manual for operating instructions.

Boom extension capacity notes:

1. 31 ft and 55 ft extension lengths may be used for single line lifting service.
2. Radii listed are for a fully extended boom with the boom extension erected. For main boom lengths less than fully extended, the rated loads are determined by boom angle. For boom angles not shown, use the rating of the next lower angle.
   Warning: Operation of this machine with heavier loads than the capacities listed is strictly prohibited. Machine tipping with boom extension occurs rapidly and without advance warning.
3. Boom angle is the angle above or below horizontal of the longitudinal axis of the boom base section after lifting rated load.
4. Capacities listed are with outriggers properly extended and vertical jacks set.
5. When lifting over the main boom nose with 31 ft or 55 ft extension erected, the outriggers must be fully extended or 50% (17.5 ft) spread.

THIS CHART IS ONLY A GUIDE AND SHOULD NOT BE USED TO OPERATE THE CRANE.
The individual crane's load chart, operating instructions and other instructional plates must be read and understood prior to operating the crane.

NBT40103-1

9,45 m - 31,39 m (31 ft - 103 ft)

7,52 m (24.7 ft)

360°

Pounds

Radius in Feet	#01						
	Main Boom Length in Feet						
	31	43-A	55-B	67-C	79-D	91-E	103
7	80,000 (73.6)						
8	78,000 (71.6)	51,000 (76.9)					
10	67,700 (67.6)	50,000 (74.1)	50,000 (78)				
12	57,000 (63.4)	48,000 (71.2)	46,000 (75.8)	37,000 (78.7)			
15	44,200 (56.9)	44,500 (66.8)	39,000 (72.5)	36,000 (76.1)	33,000 (78.7)		
20	32,000 (44.5)	32,400 (59.1)	32,550 (66.8)	32,750 (71.6)	29,000 (75.1)	18,500 (77.3)	18,500 (79.4)
25	24,450 (28)	24,900 (50.6)	25,100 (60.8)	25,200 (66.9)	25,400 (71.3)	18,000 (74.2)	17,500 (76.8)
30		19,050 (40.9)	19,300 (54.4)	19,500 (62)	19,650 (67.2)	17,500 (71)	16,500 (74)
35		14,700 (28.6)	14,950 (47.4)	15,100 (56.8)	15,250 (63)	15,350 (67.6)	15,000 (71.1)
40			11,900 (39.5)	12,050 (51.3)	12,200 (58.6)	12,300 (63.9)	12,400 (68.1)
45			9750 (31)	9950 (46)	10,050 (54.5)	10,150 (60.5)	10,250 (65.1)
50			8000 (17.4)	8200 (39.4)	8300 (49.7)	8400 (56.6)	8500 (61.7)
55				6800 (31.7)	6950 (44.6)	7000 (52.6)	7100 (58.3)
60				5700 (21.6)	5800 (38.9)	5900 (48.3)	5950 (54.8)
65					4850 (32.3)	4950 (43.7)	5000 (51.1)
70					4100 (24.2)	4150 (38.6)	4250 (47.2)
75					3400 (11.2)	3500 (32.9)	3550 (43.1)
80						2900 (26.1)	2950 (38.5)
85						2400 (16.7)	2450 (33.5)
90							2000 (27.6)
95							1600 (20)
100							1250 (4.7)
Minimum boom angle (°) for indicated length (no load)							0
Maximum boom length (ft.) at 0° boom angle (no load)							103

NOTE: ( ) Boom angles are in degrees.
#RCL operating code. Refer to RCL manual for operating instructions.

Lifting Capacities at Zero Degree Boom Angle							
Boom Angle	Main Boom Length in Feet						
	31	43-A	55-B	67-C	79-D	91-E	103
0°	20,350 (28.5)	11,650 (40.5)	7300 (52.5)	4850 (64.5)	3250 (76.5)	2100 (88.5)	1250 (100.5)

NOTE: ( ) Reference radii in feet. 80101797

Rated Load Reductions from main boom capacity when lifting over main boom nose with							
tele. erected (retracted)	2300	2150	2000	1950	1900	1850	1800
31' off. erected at 0° offset	1800	1700	1550	1500	1450	1450	1400

THIS CHART IS ONLY A GUIDE AND SHOULD NOT BE USED TO OPERATE THE CRANE.
The individual crane's load chart, operating instructions and other instructional plates must be read and understood prior to operating the crane.

Load chart

NBT40103-1

9,45 m - 31,39 m (31 ft - 103 ft)

Stowed

7,52 m (24.7 ft)

360°

Pounds

Radius in Feet	#02						
	Main Boom Length in Feet						
	31	43-A	55-B	67-C	79-D	91-E	103
7	79,200 (73.6)						
8	77,200 (71.6)	50,350 (76.9)					
10	66,900 (67.6)	49,350 (74.1)	49,550 (78)				
12	56,200 (63.4)	47,350 (71.2)	45,550 (75.8)	36,600 (78.7)			
15	43,400 (56.9)	43,850 (66.8)	38,550 (72.5)	35,600 (76.1)	32,650 (78.7)		
20	31,200 (44.5)	31,750 (59.1)	32,100 (66.8)	32,350 (71.6)	28,650 (75.1)	18,200 (77.3)	18,250 (79.4)
25	23,650 (28)	24,250 (50.6)	24,650 (60.8)	24,800 (66.9)	25,050 (71.3)	17,700 (74.2)	17,250 (76.8)
30		18,400 (40.9)	18,850 (54.4)	19,100 (62)	19,300 (67.2)	17,200 (71)	16,250 (74)
35		14,050 (28.6)	14,500 (47.4)	14,700 (56.8)	14,900 (63)	15,050 (67.6)	14,750 (71.1)
40			11,450 (39.5)	11,650 (51.3)	11,850 (58.6)	12,000 (63.9)	12,150 (68.1)
45			9300 (31)	9550 (46)	9700 (54.5)	9850 (60.5)	10,000 (65.1)
50			7550 (17.4)	7800 (39.4)	7950 (49.7)	8100 (56.6)	8250 (61.7)
55				6400 (31.7)	6600 (44.6)	6700 (52.6)	6850 (58.3)
60				5300 (21.6)	5450 (38.9)	5600 (48.3)	5700 (54.8)
65					4500 (32.3)	4650 (43.7)	4750 (51.1)
70					3750 (24.2)	3850 (38.6)	4000 (47.2)
75					3050 (11.2)	3200 (32.9)	3300 (43.1)
80						2600 (26.1)	2700 (38.5)
85						2100 (16.7)	2200 (33.5)
90							1750 (27.6)
95							1350 (20)
100							1000 (4.7)
Minimum boom angle (°) for indicated length (no load)							0
Maximum boom length (ft.) at 0° boom angle (no load)							103

NOTE: ( ) Boom angles are in degrees.
#RCL operating code. Refer to RCL manual for operating instructions.

Lifting Capacities at Zero Degree Boom Angle							
Boom Angle	Main Boom Length in Feet						
	31	43-A	55-B	67-C	79-D	91-E	103
0°	19,550 (28.5)	10,600 (40.5)	6850 (52.5)	4450 (64.5)	2900 (76.5)	1800 (88.5)	1000 (100.5)

NOTE: ( ) Reference radii in feet. 801 01 802

THIS CHART IS ONLY A GUIDE AND SHOULD NOT BE USED TO OPERATE THE CRANE.
The individual crane's load chart, operating instructions and other instructional plates must be read and understood prior to operating the crane.

NBT40103-1

9,45 m - 16,76 m (31 ft - 55 ft)

7,52 m (24.7 ft)

360°

Pounds

Radius in Feet	31 ft LENGTH #03
25	8800 (80)
38	8000 (75)
49	6500 (70)
60	5100 (65)
70	4100 (60)
79	3200 (55)
88	2300 (50)
96	1650 (45)
103	1150 (40)
110	750 (35)
115	500 (30)
Min. boom angle for indicated length (no load)	30.0°
Max. boom length at 0° boom angle (no load)	79 ft

Radius in Feet	55 ft LENGTH #04
29	4000 (80)
45	3700 (75)
59	3300 (70)
73	3000 (65)
85	2600 (60)
96	2100 (55)
103	1700 (50)
115	1250 (45)
123	850 (40)
130	550 (35)
Min. boom angle for indicated length (no load)	35.0°
Max. boom length at 0° boom angle (no load)	79 ft.

80027072

NOTE: ( ) Boom angles are in degrees.
#RCL operating code. Refer to RCL manual for operating instructions.

Boom extension capacity notes:

1. 31 ft and 55 ft extension lengths may be used for single line lifting service.
2. Radii listed are for a fully extended boom with the boom extension erected. For main boom lengths less than fully extended, the rated loads are determined by boom angle. For boom angles not shown, use the rating of the next lower angle.
   Warning: Operation of this machine with heavier loads than the capacities listed is strictly prohibited. Machine tipping with boom extension occurs rapidly and without advance warning.
3. Boom angle is the angle above or below horizontal of the longitudinal axis of the boom base section after lifting rated load.
4. Capacities listed are with outriggers properly extended and vertical jacks set.
5. When lifting over the main boom nose with 31 ft or 55 ft extension erected, the outriggers must be fully extended or 50% (17.5 ft) spread.

THIS CHART IS ONLY A GUIDE AND SHOULD NOT BE USED TO OPERATE THE CRANE.
The individual crane's load chart, operating instructions and other instructional plates must be read and understood prior to operating the crane.

Load chart

NBT45103-1

9,45 m - 31,39 m (31 ft - 103 ft)

7,52 m (24.7 ft)

360°

Pounds

Radius in Feet	#01						
	Main Boom Length in Feet						
	31	43-A	55-B	67-C	79-D	91-E	103
7	90,000 (73.6)						
8	82,000 (71.6)	51,000 (76.9)					
10	69,950 (67.6)	51,000 (74.1)	50,000 (78)				
12	58,000 (63.4)	50,000 (71.2)	47,000 (75.8)	37,000 (78.7)			
15	45,700 (56.9)	46,050 (66.9)	40,000 (72.5)	36,000 (76.1)	33,000 (78.7)		
20	33,150 (44.5)	33,550 (59.1)	33,700 (66.8)	33,800 (71.7)	29,000 (75.1)	18,500 (77.3)	18,500 (79.5)
25	25,400 (28)	25,800 (50.7)	26,050 (60.8)	26,150 (66.9)	26,250 (71.2)	18,000 (74.2)	17,500 (76.8)
30		20,650 (40.9)	20,850 (54.4)	21,000 (62)	21,050 (67.2)	17,500 (71)	16,500 (74)
35		16,200 (28.6)	16,450 (47.5)	16,650 (56.9)	16,750 (63.1)	16,200 (67.6)	15,000 (71.1)
40			13,200 (39.6)	13,350 (51.4)	13,450 (58.8)	13,600 (64.1)	13,500 (68.2)
45			10,900 (30)	11,050 (45.5)	11,150 (54.2)	11,150 (60.4)	11,250 (65.1)
50			9000 (17.5)	9200 (39.5)	9300 (49.9)	9400 (56.9)	9500 (62.1)
55				7700 (31.8)	7800 (44.7)	7900 (52.8)	8000 (58.7)
60				6500 (21.7)	6600 (39)	6700 (48.5)	6750 (55.1)
65					5600 (32.4)	5700 (43.9)	5750 (51.4)
70					4750 (24.3)	4850 (38.8)	4900 (47.5)
75					4000 (11.2)	4100 (33.1)	4200 (43.3)
80						3500 (26.3)	3550 (38.8)
85						2950 (16.8)	3000 (33.7)
90							2550 (27.8)
95							2100 (20.2)
100							1700 (4.7)
Minimum boom angle (°) for indicated length (no load)							0
Maximum boom length (ft.) at 0° boom angle (no load)							103

NOTE: ( ) Boom angles are in degrees.
#RCL operating code. Refer to RCL manual for operating instructions.

Lifting Capacities at Zero Degree Boom Angle							
Boom Angle	Main Boom Length in Feet						
	31	43-A	55-B	67-C	79-D	91-E	103
0°	21,850 (28.5)	13,150 (40.5)	8450 (52.5)	5650 (64.5)	3850 (76.5)	2650 (88.5)	1650 (100.5)

NOTE: ( ) Reference radii in feet. 80101796

Rated Load Reductions from main boom capacity when lifting over main boom nose with :							
tele. erected (retracted)	2300	2150	2000	1950	1900	1850	1800
31' off. erected at 0° offset	1800	1700	1550	1500	1450	1450	1400

THIS CHART IS ONLY A GUIDE AND SHOULD NOT BE USED TO OPERATE THE CRANE.
The individual crane's load chart, operating instructions and other instructional plates must be read and understood prior to operating the crane.

NBT45103-1

9,45 m - 31,39 m (31 ft - 103 ft)

Stowed

7,52 m (24.7 ft)

360°

Pounds

Radius in Feet	#02						
	Main Boom Length in Feet						
	31	43-A	55-B	67-C	79-D	91-E	103
7	89,200 (73.6)						
8	81,200 (71.6)	50,350 (76.9)					
10	69,150 (67.6)	50,350 (74.1)	49,550 (78)				
12	57,200 (63.4)	49,350 (71.2)	46,550 (75.8)	36,600 (78.7)			
15	44,900 (56.9)	45,400 (66.9)	39,550 (72.5)	35,600 (76.1)	32,650 (78.7)		
20	32,350 (44.5)	32,900 (59.1)	33,250 (66.8)	33,400 (71.7)	28,650 (75.1)	18,200 (77.3)	18,250 (79.5)
25	24,600 (28)	25,150 (50.7)	25,600 (60.8)	25,750 (66.9)	25,900 (71.2)	17,700 (74.2)	17,250 (76.8)
30		20,000 (40.9)	20,400 (54.4)	20,600 (62)	20,700 (67.2)	17,200 (71)	16,250 (74)
35		15,550 (28.6)	16,000 (47.5)	16,250 (56.9)	16,400 (63.1)	15,900 (67.6)	14,750 (71.1)
40			12,750 (39.6)	12,950 (51.4)	13,100 (58.8)	13,300 (64.1)	13,250 (68.2)
45			10,450 (30)	10,650 (45.5)	10,800 (54.2)	10,850 (60.4)	11,000 (65.1)
50			8550 (17.5)	8800 (39.5)	8950 (49.9)	9100 (56.9)	9250 (62.1)
55				7300 (31.8)	7450 (44.7)	7600 (52.8)	7750 (58.7)
60				6100 (21.7)	6250 (39)	6400 (48.5)	6500 (55.1)
65					5250 (32.4)	5400 (43.9)	5500 (51.4)
70					4400 (24.3)	4550 (38.8)	4650 (47.5)
75					3650 (11.2)	3800 (33.1)	3950 (43.3)
80						3200 (26.3)	3300 (38.8)
85						2650 (16.8)	2750 (33.7)
90							2300 (27.8)
95							1850 (20.2)
100							1450 (4.7)
Minimum boom angle (°) for indicated length (no load)							0
Maximum boom length (ft.) at 0° boom angle (no load)							103

NOTE: ( ) Boom angles are in degrees.
#RCL operating code. Refer to RCL manual for operating instructions.

Lifting Capacities at Zero Degree Boom Angle							
Boom Angle	Main Boom Length in Feet						
	31	43-A	55-B	67-C	79-D	91-E	103
0°	21,050 (28.5)	12,500 (40.5)	8000 (52.5)	5250 (64.5)	3500 (76.5)	2350 (88.5)	1350 (100.5)

NOTE: ( ) Reference radii in feet. 80026255

THIS CHART IS ONLY A GUIDE AND SHOULD NOT BE USED TO OPERATE THE CRANE.

The individual crane's load chart, operating instructions and other instructional plates must be read and understood prior to operating the crane.

Load chart

NBT45103-1

9,45 m - 16,76 m (31 ft - 55 ft)

7,52 m (24.7 ft)

360°

Pounds

Radius in Feet	31 ft LENGTH #03
25	8800 (80)
38	8000 (75)
49	6500 (70)
60	5100 (65)
70	4100 (60)
79	3300 (55)
88	2600 (50)
96	1900 (45)
103	1350 (40)
110	950 (35)
115	650 (30)
Min. boom angle for indicated length (no load)	25.1°
Max. boom length at 0° boom angle (no load)	103 ft

Radius in Feet	55 ft. LENGTH #04
29	4000 (80)
45	3700 (75)
59	3300 (70)
73	3000 (65)
85	2600 (60)
96	2100 (55)
103	1700 (50)
115	1300 (45)
123	950 (40)
130	650 (35)
Min. boom angle for indicated length (no load)	28.2°
Max. boom length at 0° boom angle (no load)	103 ft

80026259A

NOTE: ( ) Boom angles are in degrees.
#RCL operating code. Refer to RCL manual for operating instructions.

Boom extension capacity notes:

1. 31 ft and 55 ft extension lengths may be used for single line lifting service.
2. Radii listed are for a fully extended boom with the boom extension erected. For main boom lengths less than fully extended, the rated loads are determined by boom angle. For boom angles not shown, use the rating of the next lower angle.
   Warning: Operation of this machine with heavier loads than the capacities listed is strictly prohibited. Machine tipping with boom extension occurs rapidly and without advance warning.
3. Boom angle is the angle above or below horizontal of the longitudinal axis of the boom base section after lifting rated load.
4. Capacities listed are with outriggers properly extended and vertical jacks set.
5. When lifting over the main boom nose with 31 ft or 55 ft extension erected, the outriggers must be fully extended or 50% (17.5 ft) spread.

THIS CHART IS ONLY A GUIDE AND SHOULD NOT BE USED TO OPERATE THE CRANE.
The individual crane's load chart, operating instructions and other instructional plates must be read and understood prior to operating the crane.

NBT36127-1

38,71 m (127 ft) | 9,45 m - 16,76 m (31 ft - 55 ft) | 7,52 m (24.7 ft) | 360°

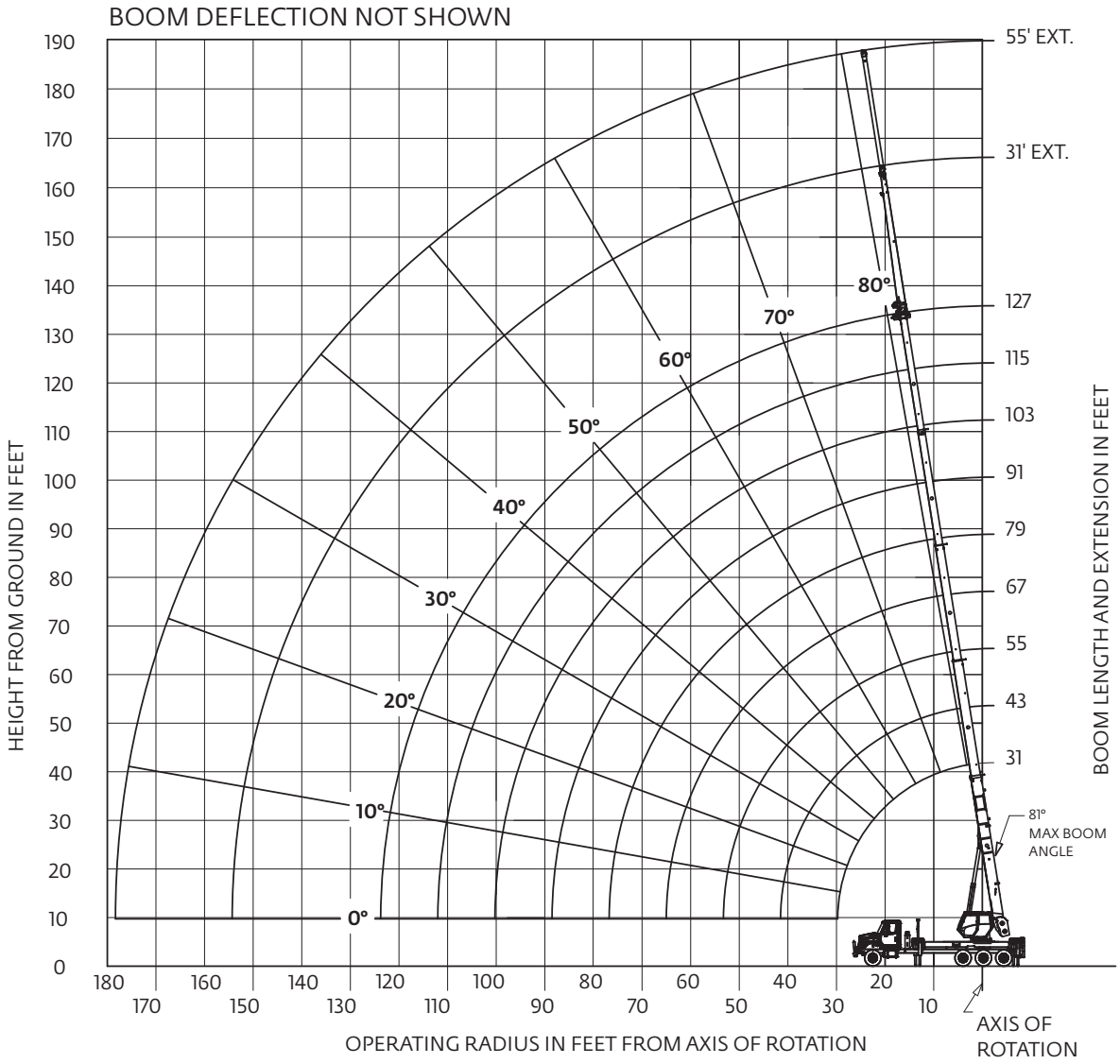

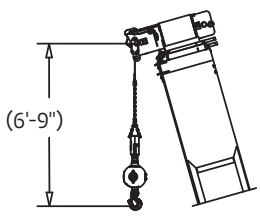

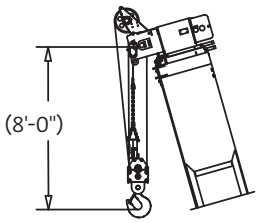

DIMENSIONS ARE FOR LARGEST FURNISHED HOOK BLOCK & HEADACHE BALL, WITH ANTI-TWO BLOCK ACTIVATED.

* DRAWING IS TO SHOW THE PHYSICAL REACH OF THE MACHINE. ALWAYS REFER TO LOAD CHART TO SEE WHAT PORTIONS OF THIS RANGE ARE STRUCTURALLY AND STABILITY LIMITED.

THIS CHART IS ONLY A GUIDE AND SHOULD NOT BE USED TO OPERATE THE CRANE.
The individual crane's load chart, operating instructions and other instructional plates must be read and understood prior to operating the crane.

Load chart

NBT36127-1

9,45 m - 38,71 m (31 ft - 127 ft)

7,52 m (24.7 ft)

360°

Pounds

Radius in Feet	#01								
	Main Boom Length in Feet								
	31	43-A	55-B	67-C	79-D	91-E	103-F	115-G	127
7	72,000 (73.6)								
8	70,000 (71.6)								
10	66,000 (67.6)	40,000 (74.2)							
12	54,600 (63.4)	38,000 (71.4)	39,000 (75.8)	36,000 (78.8)					
15	42,700 (56.8)	36,000 (67.0)	37,000 (72.6)	34,000 (76.2)	27,000 (78.6)	21,000 (80.4)			
20	30,800 (44.4)	31,300 (59.4)	31,800 (66.9)	32,000 (71.7)	24,000 (74.9)	19,000 (77.2)	15,500 (79.2)	12,500 (80.7)	
25	23,400 (27.8)	24,000 (51.0)	24,400 (61.0)	24,600 (67.0)	20,500 (71.1)	16,000 (74.0)	14,200 (76.5)	12,000 (78.4)	9500 (79.9)
30		17,950 (41.4)	18,350 (54.6)	18,600 (62.1)	18,500 (67.2)	15,200 (70.8)	13,000 (73.7)	11,800 (76.0)	9100 (77.9)
35		13,700 (29.4)	14,100 (47.7)	14,350 (57.0)	14,550 (63.0)	14,000 (67.4)	12,100 (70.8)	11,100 (73.7)	8700 (75.8)
40			11,150 (40.0)	11,400 (51.5)	11,550 (58.7)	11,700 (63.9)	11,200 (67.9)	10,100 (71.2)	8500 (73.6)
45			9050 (31.5)	9300 (46.2)	9450 (54.6)	9600 (60.4)	9750 (65.0)	9000 (68.6)	8100 (71.3)
50			7350 (18.5)	7600 (39.7)	7750 (49.8)	7900 (56.6)	8050 (61.7)	8150 (65.8)	7800 (69.0)
55				6250 (32.1)	6400 (44.7)	6550 (52.6)	6650 (58.3)	6800 (62.9)	6900 (66.5)
60				5150 (22.3)	5350 (39.1)	5450 (48.3)	5550 (54.8)	5650 (59.8)	5750 (63.8)
65					4400 (32.6)	4550 (43.7)	4650 (51.1)	4750 (56.7)	4850 (61.0)
70					3650 (24.6)	3750 (38.7)	3850 (47.3)	3950 (53.4)	4050 (58.2)
75					2950 (12.3)	3100 (33.1)	3200 (43.1)	3300 (50.0)	3350 (55.2)
80						2500 (26.3)	2600 (38.6)	2700 (46.5)	2750 (52.2)
85						1950 (17.2)	2050 (33.6)	2150 (42.8)	2250 (49.0)
90							1600 (27.8)	1700 (38.7)	1750 (45.7)
95							1200 (20.4)	1300 (34.2)	1350 (42.1)
100								900 (29.0)	1000 (38.3)
105								600 (22.8)	650 (34.2)
Minimum boom angle (°) for indicated length (no load)							0	22.5	34
Maximum boom length (ft.) at 0° boom angle (no load)							103		

NOTE: ( ) Boom angles are in degrees.
#RCL operating code. Refer to RCL manual for operating instructions.

Lifting Capacities at Zero Degree Boom Angle									
Boom Angle	Main Boom Length in Feet								
	31	43-A	55-B	67-C	79-D	91-E	103-F	115-G	127
0°	19,100 (28.5)	10,450 (40.5)	6550 (52.5)	4300 (64.5)	2750 (76.5)	1600 (88.5)	800 (100.5)		

NOTE: ( ) Reference radii in feet. 80100986

Rated Load Reductions from main boom capacity when lifting over main boom nose with ext. erected (retracted):									
(in lb)	2300	2150	2000	1950	1900	1850	1800	1750	1700

THIS CHART IS ONLY A GUIDE AND SHOULD NOT BE USED TO OPERATE THE CRANE.
The individual crane's load chart, operating instructions and other instructional plates must be read and understood prior to operating the crane.

NBT36127-1

9,45 m - 38,71 m (31 ft - 127 ft)

Stowed

7,52 m (24.7 ft)

360°

Pounds

Radius in Feet	#02								
	Main Boom Length in Feet								
	31	43-A	55-B	67-C	79-D	91-E	103-F	115-G	127
7	71,200 (73.6)								
8	69,200 (71.6)								
10	65,200 (67.6)	39,350 (71.4)							
12	53,800 (63.4)	37,350 (71.4)	38,550 (75.8)	35,600 (78.8)					
15	41,900 (56.8)	35,350 (67.0)	36,550 (72.6)	33,600 (76.2)	26,600 (78.6)	20,650 (80.4)			
20	30,000 (44.4)	30,650 (59.4)	31,350 (66.9)	31,600 (71.7)	23,600 (74.9)	18,650 (77.2)	15,200 (79.2)	12,250 (80.7)	
25	22,600 (27.8)	23,350 (51.0)	23,950 (61.0)	24,200 (67.0)	20,100 (71.1)	15,650 (74.0)	13,900 (76.5)	11,750 (78.4)	9300 (79.9)
30		17,350 (41.4)	17,950 (54.6)	18,300 (62.1)	18,100 (67.2)	14,850 (70.8)	12,700 (73.7)	11,550 (76.0)	8900 (77.9)
35		13,050 (29.4)	13,700 (47.7)	14,050 (57.0)	14,200 (63.1)	13,650 (67.4)	11,800 (70.8)	10,750 (73.7)	8500 (75.8)
40			10,750 (39.9)	11,050 (51.5)	11,200 (58.7)	11,400 (63.9)	10,900 (67.9)	9850 (71.2)	8300 (73.6)
45			8600 (31.5)	8950 (46.2)	9100 (54.6)	9300 (60.4)	9500 (65.0)	8750 (68.6)	7900 (71.3)
50			6900 (18.5)	7200 (39.7)	7400 (49.8)	7600 (56.6)	7800 (61.7)	7950 (65.8)	7600 (69.0)
55				5850 (32.1)	6050 (44.7)	6200 (52.6)	6400 (58.3)	6600 (62.9)	6750 (66.5)
60				4750 (22.3)	4950 (39.1)	5100 (48.3)	5300 (54.8)	5450 (59.8)	5600 (63.8)
65					4000 (32.6)	4100 (43.7)	4350 (51.1)	4500 (56.7)	4650 (61.0)
70					3250 (24.7)	3400 (38.7)	3600 (47.3)	3750 (53.4)	3850 (58.2)
75					2550 (12.3)	2750 (33.1)	2900 (43.1)	3050 (50.0)	3200 (55.2)
80						2150 (26.3)	2350 (38.6)	2500 (46.5)	2600 (52.2)
85						1650 (17.2)	1800 (33.6)	1950 (42.8)	2050 (49.0)
90							1350 (27.8)	1450 (38.7)	1600 (45.7)
95							900 (20.4)	1050 (34.2)	1150 (42.1)
100								700 (29.0)	800 (38.3)
105									450 (34.2)
Minimum boom angle (°) for indicated length (no load)							0	22.5	34
Maximum boom length (ft.) at 0° boom angle (no load)							103		

NOTE: ( ) Boom angles are in degrees.
#RCL operating code. Refer to RCL manual for operating instructions.

Lifting Capacities at Zero Degree Boom Angle									
Boom Angle	Main Boom Length in Feet								
	31	43-A	55-B	67-C	79-D	91-E	103-F	115-G	127
0°	18,300 (28.5)	9850 (40.5)	6150 (52.5)	3900 (64.5)	2350 (76.5)	1300 (88.5)	500 (100.5)		

NOTE: ( ) Reference radii in feet.

80100987

THIS CHART IS ONLY A GUIDE AND SHOULD NOT BE USED TO OPERATE THE CRANE.
The individual crane's load chart, operating instructions and other instructional plates must be read and understood prior to operating the crane.

Load chart

NBT36127-1

9,45 m - 16,76 m (31 ft - 55 ft)

7,52 m (24.7 ft)

360°

Pounds

Radius in Feet	31 ft LENGTH
	#03
30	3400 (80)
46	3200 (75)
60	2700 (70)
73	2100 (65)
85	1700 (60)
96	1200 (55)
106	500 (50)
Min. boom angle for indicated length (no load)	50°
Max. boom length at 0° boom angle (no load)	79 ft

Radius in Feet	55 ft LENGTH
	#04
36	2200 (80)
54	2200 (75)
70	1600 (70)
85	1000 (65)
Min. boom angle for indicated length (no load)	58°
Max. boom length at 0° boom angle (no load)	79 ft

80100988

NOTE: ( ) Boom angles are in degrees.
#RCL operating code. Refer to RCL manual for operating instructions.

Boom extension capacity notes:

1. 31 ft and 55 ft extension lengths may be used for single line lifting service.
2. Radii listed are for a fully extended boom with the boom extension erected. For main boom lengths less than fully extended, the rated loads are determined by boom angle. For boom angles not shown, use the rating of the next lower angle.
   Warning: Operation of this machine with heavier loads than the capacities listed is strictly prohibited. Machine tipping with boom extension occurs rapidly and without advance warning.
3. Boom angle is the angle above or below horizontal of the longitudinal axis of the boom base section after lifting rated load.
4. Capacities listed are with outriggers properly extended and vertical jacks set.
5. When lifting over the main boom nose with 31 ft or 55 ft extension erected, the outriggers must be fully extended or 50% (17.5 ft) spread.

THIS CHART IS ONLY A GUIDE AND SHOULD NOT BE USED TO OPERATE THE CRANE.
The individual crane's load chart, operating instructions and other instructional plates must be read and understood prior to operating the crane.

NBT36127-1

38,71 m (127 ft) | 9,45 m - 16,76 m (31 ft - 55 ft) | 7,52 m (24.7 ft) | 360°

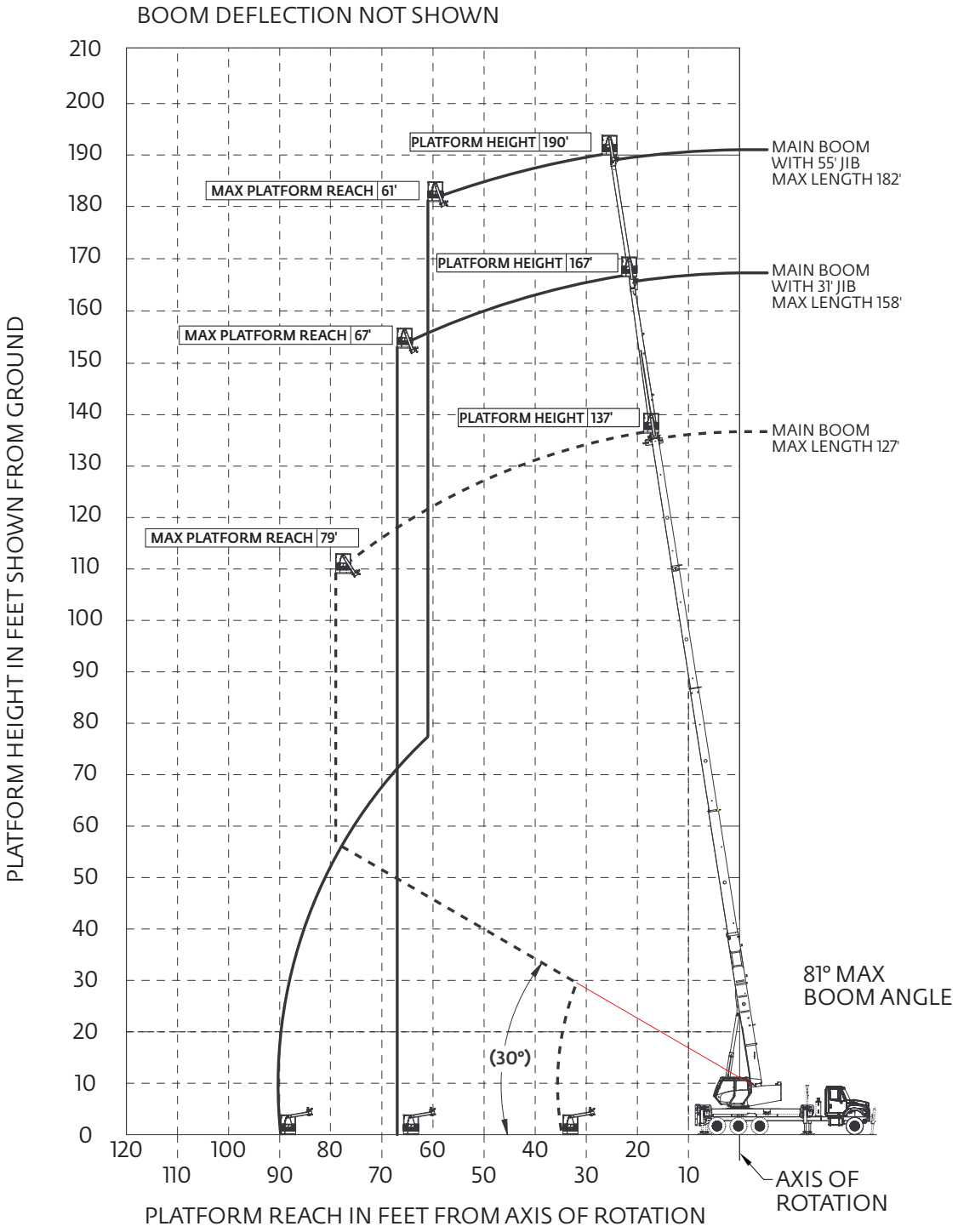

Please refer to page 51 of this product guide for important notes regarding the aerial reach diagrams.

THIS CHART IS ONLY A GUIDE AND SHOULD NOT BE USED TO OPERATE THE CRANE.
The individual crane's load chart, operating instructions and other instructional plates must be read and understood prior to operating the crane.

Working range

NBT40-1 and NBT45-1 (127)

38,71 m (127 ft) | 9,45 m - 16,76 m (31 ft - 55 ft) | 7,52 m (24.7 ft) | 360°

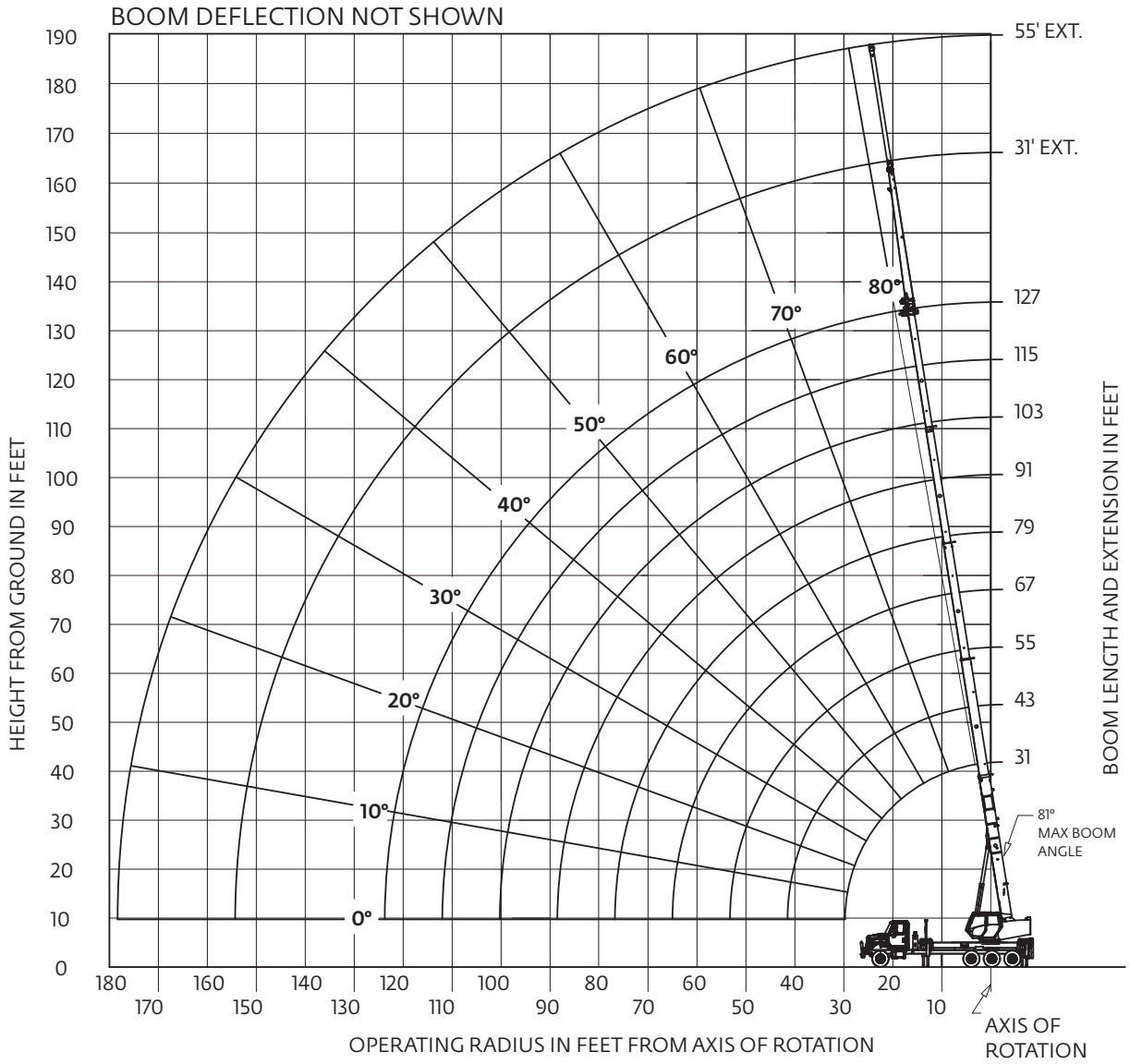

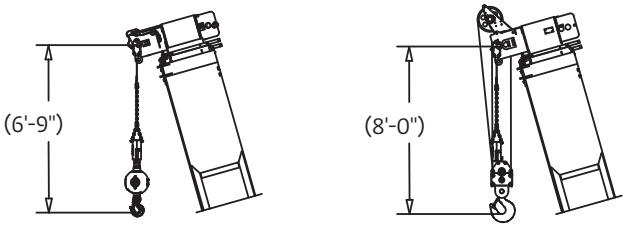

DIMENSIONS ARE FOR LARGEST FURNISHED HOOK BLOCK & HEADACHE BALL, WITH ANTI-TWO BLOCK ACTIVATED.

* DRAWING IS TO SHOW THE PHYSICAL REACH OF THE MACHINE. ALWAYS REFER TO LOAD CHART TO SEE WHAT PORTIONS OF THIS RANGE ARE STRUCTURALLY AND STABILITY LIMITED.

THIS CHART IS ONLY A GUIDE AND SHOULD NOT BE USED TO OPERATE THE CRANE.
The individual crane's load chart, operating instructions and other instructional plates must be read and understood prior to operating the crane.

NBT40127-1

9,45 m - 38,71 m (31 ft - 127 ft)

7,52 m (24.7 ft)

360°

Pounds

Radius in Feet	#01								
	Main Boom Length in Feet								
	31	43-A	55-B	67-C	79-D	91-E	103-F	115-G	127
7	80,000 (73.6)								
8	75,000 (71.6)								
10	67,300 (67.6)	41,000 (71.4)							
12	56,000 (63.4)	41,000 (67.0)	40,500 (75.8)	40,300 (78.8)					
15	43,750 (56.8)	39,000 (59.4)	40,500 (72.6)	37,300 (76.2)	28,700 (78.6)	21,850 (80.4)			
20	31,500 (44.4)	32,000 (51.0)	32,200 (66.9)	32,600 (71.7)	25,100 (74.9)	19,400 (77.2)	16,300 (79.2)	12,850 (80.7)	
25	23,950 (27.8)	24,500 (41.4)	24,600 (61.0)	25,100 (67.0)	22,200 (71.1)	17,250 (74.0)	14,950 (76.5)	12,600 (78.4)	10,000 (79.9)
30		19,200 (29.4)	19,650 (54.6)	19,900 (62.1)	20,150 (67.2)	15,650 (70.8)	13,700 (73.7)	11,800 (76.0)	9900 (77.9)
35		14,750 (28.8)	15,150 (47.7)	15,400 (57.0)	15,600 (63.1)	14,450 (67.4)	12,650 (70.8)	10,950 (73.7)	9500 (75.8)
40			12,050 (40.0)	12,300 (51.6)	12,450 (58.7)	12,600 (63.9)	11,600 (67.9)	10,300 (71.2)	9000 (73.6)
45			9800 (31.5)	10,100 (45.7)	10,250 (54.6)	10,400 (60.5)	10,550 (65.1)	9600 (68.6)	8600 (71.3)
50			8000 (18.5)	8300 (39.7)	8450 (49.9)	8600 (56.6)	8750 (61.8)	8900 (65.9)	8100 (69.0)
55				6850 (32.1)	7000 (44.8)	7150 (52.6)	7300 (58.4)	7400 (63.0)	7550 (66.6)
60				5700 (22.3)	5850 (39.1)	6000 (48.3)	6100 (54.9)	6200 (59.9)	6350 (63.9)
65					4900 (32.6)	5050 (43.8)	5150 (51.2)	5250 (56.8)	5350 (61.2)
70					4100 (24.7)	4200 (38.8)	4300 (47.3)	4400 (53.5)	4500 (58.3)
75					3400 (12.3)	3500 (33.1)	3600 (43.2)	3700 (50.2)	3800 (55.4)
80						2900 (26.4)	3000 (38.7)	3100 (46.8)	3200 (52.3)
85						2400 (17.3)	2500 (33.7)	2600 (42.8)	2650 (49.2)
90							2000 (27.9)	2100 (38.7)	2200 (45.9)
95							1600 (20.5)	1700 (34.2)	1750 (42.3)
100							1200 (7.1)	1300 (29.0)	1400 (38.5)
105								1000 (22.8)	1050 (34.4)
110								700 (13.7)	750 (29.7)
115									500 (24.2)
Minimum boom angle (°) for indicated length (no load)								0	24
Maximum boom length (ft) at 0° boom angle (no load)								115	

NOTE: ( ) Boom angles are in degrees.
#RCL operating code. Refer to RCL manual for operating instructions.

Lifting Capacities at Zero Degree Boom Angle									
Boom Angle	Main Boom Length in Feet								
	31	43-A	55-B	67-C	79-D	91-E	103-F	115-G	127
0°	20,100 (28.5)	11,300 (40.5)	7200 (52.5)	4800 (64.5)	3200 (76.5)	2050 (88.5)	1150 (100.5)	550 (112.5)	

NOTE: ( ) Reference radii in feet. 80100625

Rated Load Reductions from main boom capacity when lifting over main boom nose with ext. erected (retracted):									
(in lb)	2300	2150	2000	1950	1900	1850	1800	1750	1700

THIS CHART IS ONLY A GUIDE AND SHOULD NOT BE USED TO OPERATE THE CRANE.
The individual crane's load chart, operating instructions and other instructional plates must be read and understood prior to operating the crane.

Load chart

NBT40127-1

9,45 m - 38,71 m (31 ft - 127 ft)

Stowed

7,52 m (24.7 ft)

360°

Pounds

Radius in Feet	#02								
	Main Boom Length in Feet								
	31	43-A	55-B	67-C	79-D	91-E	103-F	115-G	127
7	79,200 (73.9)								
8	74,200 (71.6)								
10	66,500 (67.6)	40,350 (71.4)							
12	55,200 (63.4)	40,350 (67.0)	40,050 (75.8)	39,900 (78.8)					
15	42,950 (56.8)	38,350 (59.4)	40,050 (72.6)	36,900 (76.2)	28,350 (78.6)	21,550 (80.4)			
20	30,700 (44.4)	31,350 (51.0)	31,750 (66.9)	32,200 (71.7)	24,750 (74.9)	19,100 (77.2)	16,050 (79.2)	12,600 (80.7)	
25	23,150 (27.8)	23,850 (41.4)	24,150 (61.0)	24,700 (67.0)	21,850 (71.1)	16,950 (74.0)	14,700 (76.5)	12,350 (78.4)	9800 (79.9)
30		18,550 (29.4)	19,200 (54.6)	19,500 (62.1)	19,800 (67.2)	15,350 (70.8)	13,450 (73.7)	11,550 (76.0)	9700 (77.9)
35		14,100 (28.6)	14,700 (47.7)	15,000 (57.0)	15,250 (63.1)	14,150 (67.4)	12,400 (70.8)	10,700 (73.7)	9300 (75.8)
40			11,600 (40.0)	11,900 (51.6)	12,100 (58.7)	12,300 (63.9)	11,350 (67.9)	10,050 (71.2)	8800 (73.6)
45			9350 (31.5)	9700 (46.2)	9900 (54.6)	10,100 (60.5)	10,300 (65.1)	9350 (68.6)	8400 (71.3)
50			7550 (18.5)	7900 (39.7)	8100 (49.9)	8300 (56.6)	8500 (61.8)	8650 (65.9)	7900 (69.0)
55				6450 (32.1)	6650 (44.8)	6850 (52.6)	7050 (58.4)	7150 (63.0)	7350 (66.6)
60				5300 (22.3)	5500 (39.1)	5700 (48.3)	5850 (54.9)	5950 (59.9)	6150 (63.9)
65					4550 (32.6)	4750 (43.8)	4900 (51.2)	5000 (56.8)	5150 (61.2)
70					3750 (24.7)	3900 (38.8)	4050 (47.3)	4150 (53.5)	4300 (58.3)
75					3050 (12.3)	3200 (33.1)	3350 (43.2)	3450 (50.2)	3600 (55.4)
80						2600 (26.4)	2750 (38.7)	2850 (46.6)	3000 (52.3)
85						2100 (17.3)	2250 (33.7)	2350 (42.8)	2450 (49.2)
90							1750 (27.9)	1850 (38.7)	2000 (45.9)
95							1350 (20.5)	1450 (34.2)	1550 (42.3)
100							950 (7.1)	1050 (29.0)	1100 (38.5)
105								750 (22.8)	850 (34.4)
110								450 (13.9)	550 (29.7)
Minimum boom angle (°) for indicated length (no load)								0	24
Maximum boom length (ft) at 0° boom angle (no load)								115	

NOTE: ( ) Boom angles are in degrees.
#RCL operating code. Refer to RCL manual for operating instructions.

Lifting Capacities at Zero Degree Boom Angle									
Boom Angle	Main Boom Length in Feet								
	31	43-A	55-B	67-C	79-D	91-E	103-F	115-G	127
0°	19,300 (28.5)	10,650 (40.5)	6750 (52.5)	4400 (64.5)	2800 (76.5)	1700 (88.5)	850 (100.5)		

NOTE: ( ) Reference radii in feet.

80100929

THIS CHART IS ONLY A GUIDE AND SHOULD NOT BE USED TO OPERATE THE CRANE.
The individual crane's load chart, operating instructions and other instructional plates must be read and understood prior to operating the crane.

NBT40127-1

9,45 m - 16,76 m (31 ft - 55 ft)

7,52 m (24.7 ft)

360°

Pounds

Radius in Feet	31 ft LENGTH
	#03
30	3400 (80)
46	3200 (75)
60	2700 (70)
73	2100 (65)
85	1700 (60)
96	1200 (55)
106	650 (50)
Min. boom angle for indicated length (no load)	47°
Max. boom length at 0° boom angle (no load)	79 ft

Radius in Feet	55 ft LENGTH
	#04
36	2200 (80)
54	2200 (75)
70	1600 (70)
85	1000 (65)
Min. boom angle for indicated length (no load)	58°
Max. boom length at 0° boom angle (no load)	79 ft

80100930

NOTE: ( ) Boom angles are in degrees.
#RCL operating code. Refer to RCL manual for operating instructions.

Boom extension capacity notes:

1. 31 ft and 55 ft extension lengths may be used for single line lifting service.
2. Radii listed are for a fully extended boom with the boom extension erected. For main boom lengths less than fully extended, the rated loads are determined by boom angle. For boom angles not shown, use the rating of the next lower angle.
   Warning: Operation of this machine with heavier loads than the capacities listed is strictly prohibited. Machine tipping with boom extension occurs rapidly and without advance warning.
3. Boom angle is the angle above or below horizontal of the longitudinal axis of the boom base section after lifting rated load.
4. Capacities listed are with outriggers properly extended and vertical jacks set.
5. When lifting over the main boom nose with 31 ft or 55 ft extension erected, the outriggers must be fully extended or 50% (17.5 ft) spread.

THIS CHART IS ONLY A GUIDE AND SHOULD NOT BE USED TO OPERATE THE CRANE.
The individual crane's load chart, operating instructions and other instructional plates must be read and understood prior to operating the crane.

Aerial reach diagram

NBT40127-1

38,71 m (127 ft) | 9,45 m - 16,76 m (31 ft - 55 ft) | 7,52 m (24.7 ft) | 360°

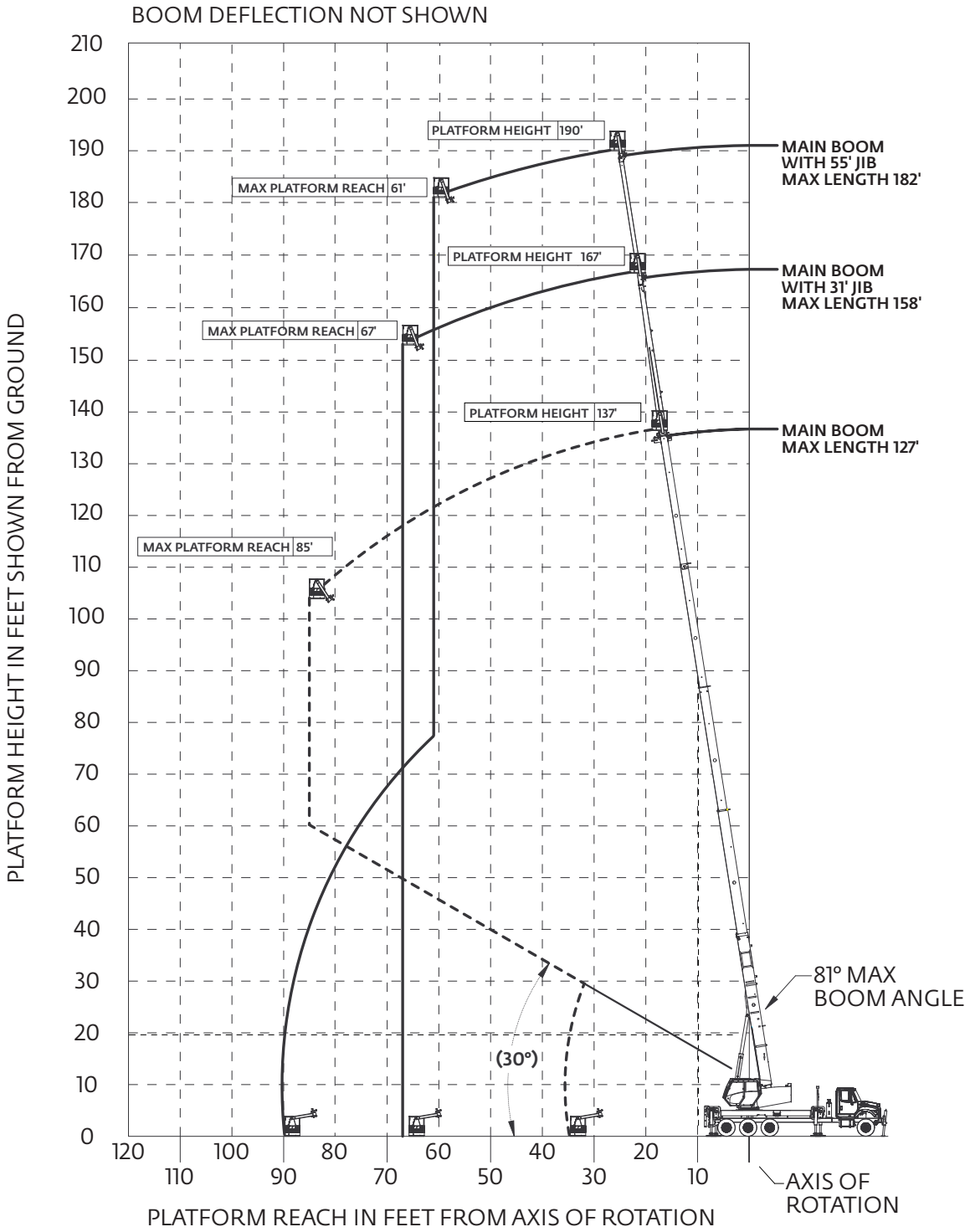

Please refer to page 51 of this product guide for important notes regarding the aerial reach diagrams.

THIS CHART IS ONLY A GUIDE AND SHOULD NOT BE USED TO OPERATE THE CRANE.
The individual crane's load chart, operating instructions and other instructional plates must be read and understood prior to operating the crane.

NBT45127-1

9,45 m - 38,71 m (31 ft - 127 ft)

7,52 m (24.7 ft)

360°

Pounds

Radius in Feet	#01								
	Main Boom Length in Feet								
	31	43-A	55-B	67-C	79-D	91-E	103-F	115-G	127
7	90,000 (73.6)								
8	81,400 (71.6)								
10	69,600 (67.6)	41,000 (74.2)							
12	57,600 (63.4)	41,000 (71.4)	40,500 (75.8)	40,300 (78.8)					
15	45,300 (56.8)	39,000 (67.0)	40,500 (72.6)	37,300 (76.2)	28,700 (78.6)	21,850 (80.4)			
20	32,700 (44.4)	33,200 (59.4)	33,600 (66.9)	33,400 (71.7)	25,100 (74.9)	19,400 (77.2)	16,300 (79.2)	12,850 (80.7)	
25	24,900 (27.8)	25,450 (51.0)	25,900 (61.0)	26,100 (67.0)	22,200 (71.1)	17,250 (74.0)	14,950 (76.5)	12,600 (78.4)	10,000 (79.9)
30		20,250 (41.4)	20,700 (54.6)	20,900 (62.1)	20,150 (67.2)	15,650 (70.8)	13,700 (73.7)	11,800 (76.0)	9900 (77.9)
35		16,300 (29.4)	16,750 (47.8)	17,000 (57.0)	17,200 (63.1)	14,450 (67.4)	12,650 (70.8)	10,950 (73.7)	9500 (75.8)
40			13,350 (40.0)	13,550 (51.6)	13,750 (58.8)	13,250 (63.9)	11,600 (67.9)	10,300 (71.2)	9000 (73.6)
45			10,950 (30.6)	11,100 (45.7)	11,250 (54.3)	11,400 (60.3)	10,700 (65.1)	9600 (68.6)	8600 (71.4)
50			9000 (18.5)	9300 (39.8)	9450 (50.0)	9600 (56.8)	9750 (62.0)	9000 (65.9)	8100 (69.0)
55				7750 (32.2)	7950 (44.8)	8050 (52.7)	8200 (58.6)	8250 (63.1)	7650 (66.7)
60				6500 (22.3)	6700 (39.2)	6800 (48.4)	6950 (55.1)	7050 (60.1)	7100 (64.2)
65					5650 (32.7)	5800 (43.9)	5900 (51.4)	6000 (57.0)	6100 (61.5)
70					4800 (24.7)	4900 (38.9)	5050 (47.5)	5100 (53.7)	5200 (58.6)
75					4050 (12.4)	4200 (33.2)	4300 (43.3)	4350 (50.3)	4450 (60.9)
80						3550 (26.5)	3650 (38.8)	3700 (46.8)	3800 (58.3)
85						2950 (17.4)	3050 (33.8)	3150 (43.0)	3250 (55.6)
90							2550 (28.0)	2650 (38.9)	2750 (52.9)
95							2100 (20.6)	2200 (34.3)	2300 (50.0)
100							1700 (7.1)	1800 (29.2)	1900 (47.0)
105								1450 (22.9)	1550 (43.9)
110								1150 (13.9)	1200 (40.6)
115									900 (24.7)
Minimum boom angle (°) for indicated length (no load)									0.0
Maximum boom length (ft.) at 0° boom angle (no load)									127

NOTE: ( ) Boom angles are in degrees.
#RCL operating code. Refer to RCL manual for operating instructions.

Lifting Capacities at Zero Degree Boom Angle									
Boom Angle	Main Boom Length in Feet								
	31	43-A	55-B	67-C	79-D	91-E	103-F	115-G	127
0°	21,100 (28.5)	12,800 (40.5)	8100 (52.5)	5500 (64.5)	3800 (76.5)	2600 (88.5)	1650 (100.5)	1000 (112.5)	

NOTE: ( ) Reference radii in feet. 80100617

Rated Load Reductions from main boom capacity when lifting over main boom nose with ext. erected (retracted):									
(in lb)	2300	2150	2000	1950	1900	1850	1800	1750	1700

THIS CHART IS ONLY A GUIDE AND SHOULD NOT BE USED TO OPERATE THE CRANE.
The individual crane's load chart, operating instructions and other instructional plates must be read and understood prior to operating the crane.

Load chart

NBT45127-1

9,45 m - 38,71 m (31 ft - 127 ft)

Stowed

7,52 m (24.7 ft)

360°

Pounds

Radius in Feet	#02								
	Main Boom Length in Feet								
	31	43-A	55-B	67-C	79-D	91-E	103-F	115-G	127
7	89,200 (73.9)								
8	80,600 (71.6)								
10	68,800 (67.6)	40,350 (74.2)							
12	56,800 (63.4)	40,350 (71.4)	40,050 (75.8)	39,900 (78.8)					
15	44,500 (56.8)	38,350 (67.0)	40,050 (72.6)	36,900 (76.2)	28,350 (78.6)	21,550 (80.4)			
20	31,900 (44.4)	32,550 (59.4)	33,150 (66.9)	33,000 (71.7)	24,750 (74.9)	19,100 (77.2)	16,050 (79.2)	12,600 (80.7)	
25	24,100 (27.8)	24,800 (51.0)	25,450 (61.0)	25,700 (67.0)	21,850 (71.1)	16,950 (74.0)	14,700 (76.5)	12,350 (78.4)	9800 (79.9)
30		19,600 (41.4)	20,250 (54.6)	20,500 (62.1)	19,800 (67.2)	15,350 (70.8)	13,450 (73.7)	11,550 (76.0)	9700 (77.9)
35		15,650 (29.4)	16,300 (47.8)	16,600 (57.0)	16,850 (63.1)	14,150 (67.4)	12,400 (70.8)	10,700 (73.7)	9300 (75.8)
40			12,900 (40.0)	13,150 (51.6)	13,400 (58.8)	12,950 (63.9)	11,350 (67.9)	10,050 (71.2)	8800 (73.6)
45			10,500 (30.6)	10,700 (45.7)	10,900 (54.3)	11,100 (60.3)	10,450 (65.1)	9350 (68.6)	8400 (71.4)
50			8550 (18.5)	8900 (39.8)	9100 (50.0)	9300 (56.8)	9500 (62.0)	8750 (65.9)	7900 (69.0)
55				7350 (32.2)	7600 (44.8)	7750 (52.7)	7950 (58.6)	8100 (63.1)	7450 (66.7)
60				6100 (22.3)	6350 (39.2)	6500 (48.4)	6700 (55.1)	6800 (60.1)	7000 (64.2)
65					5300 (32.7)	5500 (43.9)	5650 (51.4)	5750 (57.0)	5900 (61.5)
70					4450 (24.7)	4600 (38.9)	4800 (47.5)	4850 (53.7)	5000 (58.6)
75					3700 (12.4)	3900 (33.2)	4050 (43.3)	4100 (50.3)	4250 (55.7)
80						3250 (26.5)	3400 (38.8)	3450 (46.8)	3600 (52.7)
85						2650 (17.4)	2850 (33.8)	2900 (43.0)	3050 (49.5)
90							2350 (28.0)	2400 (38.9)	2550 (46.2)
95							1900 (20.6)	1950 (34.3)	2100 (42.7)
100							1450 (7.1)	1550 (29.2)	1700 (38.9)
105								1200 (22.9)	1350 (34.8)
110								900 (13.9)	1000 (30.1)
115									700 (24.7)
Minimum boom angle (°) for indicated length (no load)									0.0
Maximum boom length (ft.) at 0°boom angle (no load)									127

NOTE: ( ) Boom angles are in degrees.
#RCL operating code. Refer to RCL manual for operating instructions.

Lifting Capacities at Zero Degree Boom Angle									
Boom Angle	Main Boom Length in Feet								
	31	43-A	55-B	67-C	79-D	91-E	103-F	115-G	127
0°	20,300 (28.5)	12,150 (44.5)	7700 (52.5)	5100 (64.5)	3350 (76.5)	2300 (88.5)	1450 (100.5)	750 (112.5)	

NOTE: ( ) Reference radii in feet.

80100618

THIS CHART IS ONLY A GUIDE AND SHOULD NOT BE USED TO OPERATE THE CRANE.
The individual crane's load chart, operating instructions and other instructional plates must be read and understood prior to operating the crane.

NBT45127-1

9,45 m - 16,76 m (31 ft - 55 ft)

7,52 m (24.7 ft)

360°

Pounds

Radius in Feet	31 ft LENGTH
	#03
30	3400 (80)
46	3200 (75)
60	2700 (70)
73	2100 (65)
85	1700 (60)
96	1200 (55)
106	650 (50)
Min. boom angle for indicated length (no load)	47.0
Max. boom length at 0° boom angle (no load)	91

Radius in Feet	55 ft LENGTH
	#04
36	2200 (80)
54	2200 (75)
70	1600 (70)
85	1000 (65)
Min. boom angle for indicated length (no load)	58.0
Max. boom length at 0° boom angle (no load)	91

80100619

NOTE: ( ) Boom angles are in degrees.
#RCL operating code. Refer to RCL manual for operating instructions.

Boom extension capacity notes:

1. 31 ft and 55 ft extension lengths may be used for single line lifting service.
2. Radii listed are for a fully extended boom with the boom extension erected. For main boom lengths less than fully extended, the rated loads are determined by boom angle. For boom angles not shown, use the rating of the next lower angle.
   Warning: Operation of this machine with heavier loads than the capacities listed is strictly prohibited. Machine tipping with boom extension occurs rapidly and without advance warning.
3. Boom angle is the angle above or below horizontal of the longitudinal axis of the boom base section after lifting rated load.
4. Capacities listed are with outriggers properly extended and vertical jacks set.
5. When lifting over the main boom nose with 31 ft or 55 ft extension erected, the outriggers must be fully extended or 50% (17.5 ft) spread.

THIS CHART IS ONLY A GUIDE AND SHOULD NOT BE USED TO OPERATE THE CRANE.
The individual crane's load chart, operating instructions and other instructional plates must be read and understood prior to operating the crane.

Aerial reach diagram

NBT45127-1

38,71 m (127 ft) | 9,45 m - 16,76 m (31 ft - 55 ft) | 7,52 m (24.7 ft) | 360°

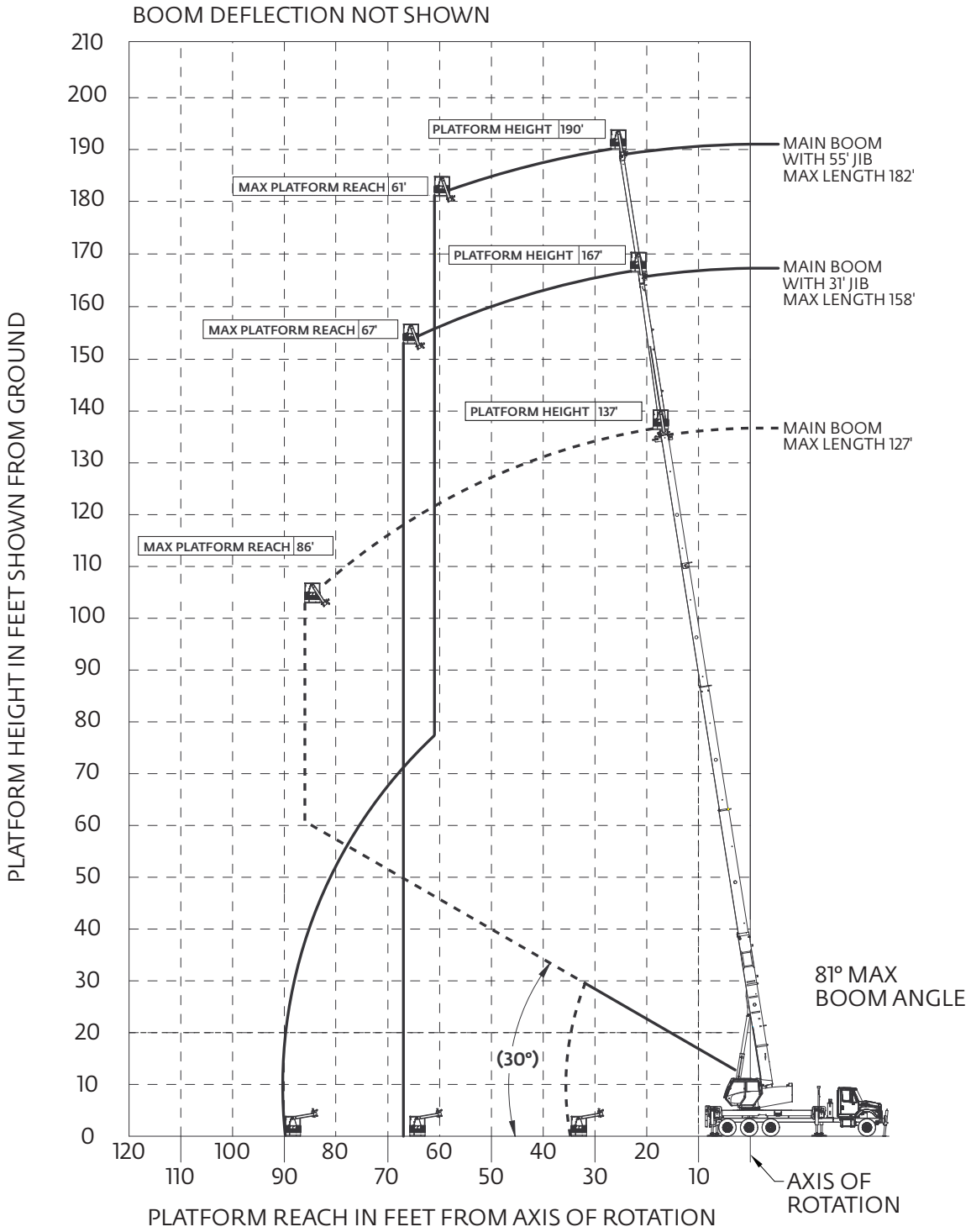

Please refer to page 51 of this product guide for important notes regarding the aerial reach diagrams.

THIS CHART IS ONLY A GUIDE AND SHOULD NOT BE USED TO OPERATE THE CRANE.
The individual crane's load chart, operating instructions and other instructional plates must be read and understood prior to operating the crane.

NBT40-1 and NBT45-1 (142)

43,29 m (142 ft) | 9,45 m - 16,76 m (31 ft - 55 ft) | 7,52 m (24.7 ft) | 360°

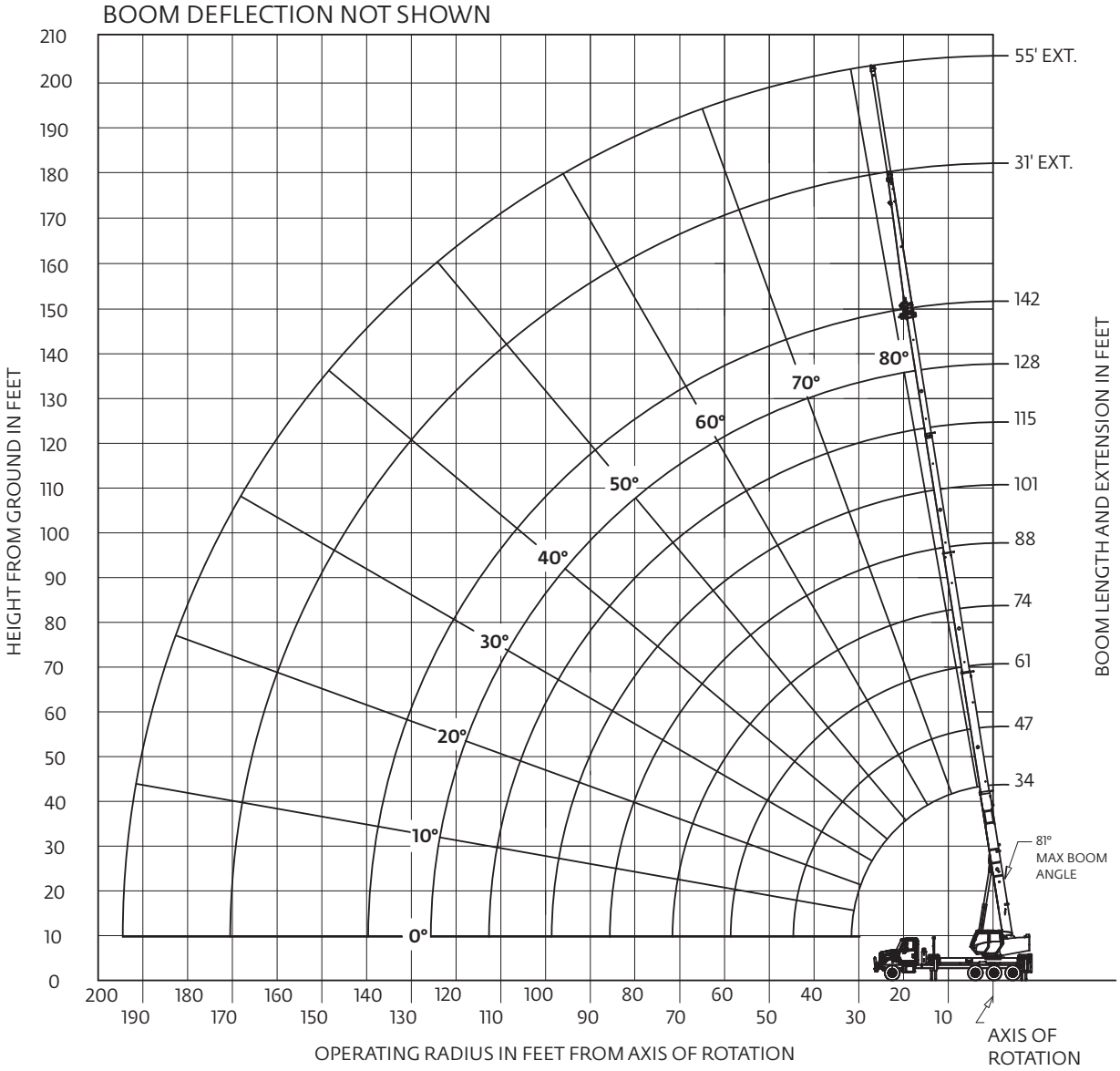

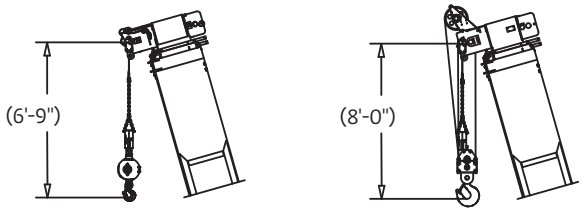

DIMENSIONS ARE FOR LARGEST FURNISHED HOOK BLOCK & HEADACHE BALL, WITH ANTI-TWO BLOCK ACTIVATED.

* DRAWING IS TO SHOW THE PHYSICAL REACH OF THE MACHINE. ALWAYS REFER TO LOAD CHART TO SEE WHAT PORTIONS OF THIS RANGE ARE STRUCTURALLY AND STABILITY LIMITED.

THIS CHART IS ONLY A GUIDE AND SHOULD NOT BE USED TO OPERATE THE CRANE.
The individual crane's load chart, operating instructions and other instructional plates must be read and understood prior to operating the crane.

Load chart

NBT40142-1

10,36 m - 43,39 m (34 ft - 142 ft)

7,52 m (24.7 ft)

360°

Pounds

Radius in Feet	#01								
	Main Boom Length in Feet								
	34	47-A	61-B	74-C	88-D	101-E	115-F	128-G	142
7	80,000 (74.9)								
8	75,000 (73.1)								
10	66,500 (69.4)	40,000 (75.6)							
12	55,000 (65.7)	40,000 (73.1)	40,000 (77.4)						
15	43,000 (59.7)	40,000 (69.2)	38,000 (74.5)	34,000 (77.7)					
20	30,750 (48.9)	31,400 (62.3)	31,800 (69.5)	30,000 (73.7)	23,050 (76.7)	17,400 (78.8)			
25	23,250 (35.7)	23,850 (55)	24,250 (64.2)	24,500 (69.5)	20,700 (73.4)	15,750 (75.9)	13,000 (78.3)		
30	18,000 (13.5)	18,800 (46.9)	19,200 (58.8)	19,450 (65.2)	18,750 (70)	14,300 (73.1)	12,150 (75.8)	10,050 (78)	8000 (79.5)
35		15,150 (37.5)	15,550 (52.9)	15,800 (60.7)	16,000 (66.4)	13,200 (70.1)	11,150 (73.5)	9550 (75.8)	7600 (77.7)
40		12,050 (25.2)	12,550 (46.6)	12,800 (56)	13,000 (62.6)	12,200 (67.1)	10,400 (71)	9050 (73.7)	7450 (75.9)
45			10,200 (40.1)	10,450 (51.5)	10,650 (59.1)	10,800 (64.2)	9750 (68.4)	8550 (71.4)	7200 (74)
50			8250 (31.8)	8550 (46.2)	8700 (55)	8900 (60.8)	9000 (65.7)	8050 (69.1)	6800 (72)
55			6700 (20.6)	7050 (40.3)	7200 (50.8)	7350 (57.3)	7500 (62.8)	7600 (66.7)	6550 (70)
60				5750 (33.6)	5950 (46.3)	6100 (53.7)	6250 (59.7)	6400 (64.1)	6200 (67.9)
65				4700 (25.4)	4950 (41.4)	5100 (49.9)	5200 (56.6)	5350 (61.4)	5450 (65.6)
70				3850 (12.6)	4050 (35.9)	4200 (45.9)	4350 (53.3)	4450 (58.6)	4550 (63.1)
75					3300 (29.6)	3450 (41.6)	3600 (49.9)	3700 (55.7)	3800 (60.6)
80					2650 (21.6)	2800 (36.9)	2900 (46.4)	3000 (52.7)	3150 (58)
85					2050 (7.2)	2150 (31.5)	2300 (42.6)	2400 (49.6)	2500 (55.3)
90						1550 (25.1)	1650 (38.5)	1800 (46.3)	1950 (52.6)
95						1150 (16.5)	1250 (34)	1400 (42.8)	1500 (49.7)
100							800 (28.8)	950 (39.2)	1050 (46.7)
105							500 (22.6)	600 (35.1)	700 (43.6)
Minimum boom angle (°) for indicated length (no load)						0	21	32.5	40.5
Maximum boom length (ft) at 0° boom angle (no load)						101			

NOTE: ( ) Boom angles are in degrees.
#RCL operating code. Refer to RCL manual for operating instructions.

Lifting Capacities at Zero Degree Boom Angle									
Boom Angle	Main Boom Length in Feet								
	34	47-A	61-B	74-C	88-D	101-E			
0°	17,350 (31.5)	9800 (44.5)	5750 (58.5)	3600 (71.5)	2000 (85.5)	900 (98.5)			

NOTE: ( ) Reference radii in feet. 80096912

Rated Load Reductions from main boom capacity when lifting over main boom nose with extension erected (retracted):									
(in lb)	2300	2150	2000	1950	1900	1850	1800	1750	1700

THIS CHART IS ONLY A GUIDE AND SHOULD NOT BE USED TO OPERATE THE CRANE.
The individual crane's load chart, operating instructions and other instructional plates must be read and understood prior to operating the crane.

NBT40142-1

10,36 m - 43,39 m (34 ft - 142 ft)

Stowed

7,52 m (24.7 ft)

360°

Pounds

Radius in Feet	#02								
	Main Boom Length in Feet								
	34	47-A	61-B	74-C	88-D	101-E	115-F	128-G	142
7	79,200 (74.9)								
8	74,200 (73.1)								
10	65,700 (69.4)	39,350 (75.6)							
12	54,200 (65.7)	39,350 (73.1)	39,550 (77.4)						
15	42,200 (59.7)	39,350 (69.2)	37,550 (74.5)	33,600 (77.7)					
20	29,950 (48.9)	30,750 (62.3)	31,350 (69.5)	29,600 (73.7)	22,650 (76.7)	17,050 (78.8)			
25	22,450 (35.7)	23,200 (55)	23,800 (64.2)	24,100 (69.5)	20,300 (73.4)	15,400 (75.9)	12,700 (78.3)		
30	17,200 (13.5)	18,150 (46.9)	18,750 (58.8)	19,050 (65.2)	18,350 (70)	13,950 (73.1)	11,850 (75.8)	9800 (78)	7800 (79.5)
35		14,500 (37.5)	15,100 (52.9)	15,400 (60.7)	15,600 (66.4)	12,850 (70.1)	10,850 (73.5)	9300 (75.8)	7400 (77.7)
40		11,400 (25.2)	12,100 (46.6)	12,400 (56)	12,600 (62.6)	11,850 (67.1)	10,100 (71)	8800 (73.7)	7250 (75.9)
45			9750 (40.1)	10,050 (51.5)	10,250 (59.1)	10,450 (64.2)	9450 (68.4)	8300 (71.4)	7000 (74)
50			7800 (31.8)	8050 (46.2)	8300 (55)	8550 (60.8)	8700 (65.7)	7800 (69.1)	6600 (72)
55			6250 (20.6)	6500 (40.3)	6800 (50.8)	7000 (57.3)	7200 (62.8)	7350 (66.7)	6350 (70)
60				5350 (33.6)	5550 (46.3)	5750 (53.7)	5950 (59.7)	6150 (64.1)	6000 (67.9)
65				4300 (25.4)	4500 (41.4)	4700 (49.9)	4900 (56.6)	5100 (61.4)	5250 (65.6)
70				3450 (12.6)	3600 (35.9)	3850 (45.9)	4000 (53.3)	4200 (58.6)	4350 (63.1)
75					2950 (29.6)	3100 (41.6)	3250 (49.9)	3450 (55.7)	3600 (60.6)
80					2250 (21.6)	2450 (36.9)	2600 (46.4)	2750 (52.7)	2900 (58)
85						1800 (31.5)	2000 (42.6)	2150 (49.6)	2300 (55.3)
90						1200 (25.1)	1350 (38.5)	1550 (46.3)	1750 (52.6)
95						850 (16.5)	950 (34.0)	1150 (42.8)	1300 (49.7)
100							500 (28.8)	700 (39.2)	850 (46.7)
105									500 (43.6)
Minimum boom angle (°) for indicated length (no load)						0	22.5	35	43.4
Maximum boom length (ft) at 0° boom angle (no load)						101			

NOTE: ( ) Boom angles are in degrees.
#RCL operating code. Refer to RCL manual for operating instructions.

Lifting Capacities at Zero Degree Boom Angle									
Boom Angle	Main Boom Length in Feet								
	34	47-A	61-B	74-C	88-D	101-E			
0°	16,550 (31.5)	9150 (44.5)	5300 (58.5)	3250 (71.5)	1650 (85.5)	600 (98.5)			

NOTE: ( ) Reference radii in feet.

80096913

THIS CHART IS ONLY A GUIDE AND SHOULD NOT BE USED TO OPERATE THE CRANE.
The individual crane's load chart, operating instructions and other instructional plates must be read and understood prior to operating the crane.

Load chart

NBT40142-1

9,45 m - 16,76 m
(31 ft - 55 ft)

7,52 m
(24.7 ft)

360°

Pounds

Radius in Feet	31 ft LENGTH
	#03
33	3400 (80)
50	3200 (75)
63	1100 (70)
Min. boom angle for indicated length (no load)	63°
Max. boom length at 0° boom angle (no load)	61 ft

Radius in Feet	55 ft LENGTH
	#04
40	2200 (80)
59	2200 (75)
74	700 (70)
Min. boom angle for indicated length (no load)	66°
Max. boom length at 0° boom angle (no load)	61 ft

80096918

NOTE: ( ) Boom angles are in degrees.
#RCL operating code. Refer to RCL manual for operating instructions.

Boom extension capacity notes:

1. 31 ft and 55 ft extension lengths may be used for single line lifting service.
2. Radii listed are for a fully extended boom with the boom extension erected. For main boom lengths less than fully extended, the rated loads are determined by boom angle. For boom angles not shown, use the rating of the next lower angle.
   Warning: Operation of this machine with heavier loads than the capacities listed is strictly prohibited. Machine tipping with boom extension occurs rapidly and without advance warning.
3. Boom angle is the angle above or below horizontal of the longitudinal axis of the boom base section after lifting rated load.
4. Capacities listed are with outriggers properly extended and vertical jacks set.
5. When lifting over the main boom nose with 31 ft or 55 ft extension erected, the outriggers must be fully extended or 50% (17.5 ft) spread.

THIS CHART IS ONLY A GUIDE AND SHOULD NOT BE USED TO OPERATE THE CRANE.
The individual crane's load chart, operating instructions and other instructional plates must be read and understood prior to operating the crane.

NBT40142-1

43,29 m (142 ft) | 9,45 m - 16,76 m (31 ft - 55 ft) | 7,52 m (24.7 ft) | 360°

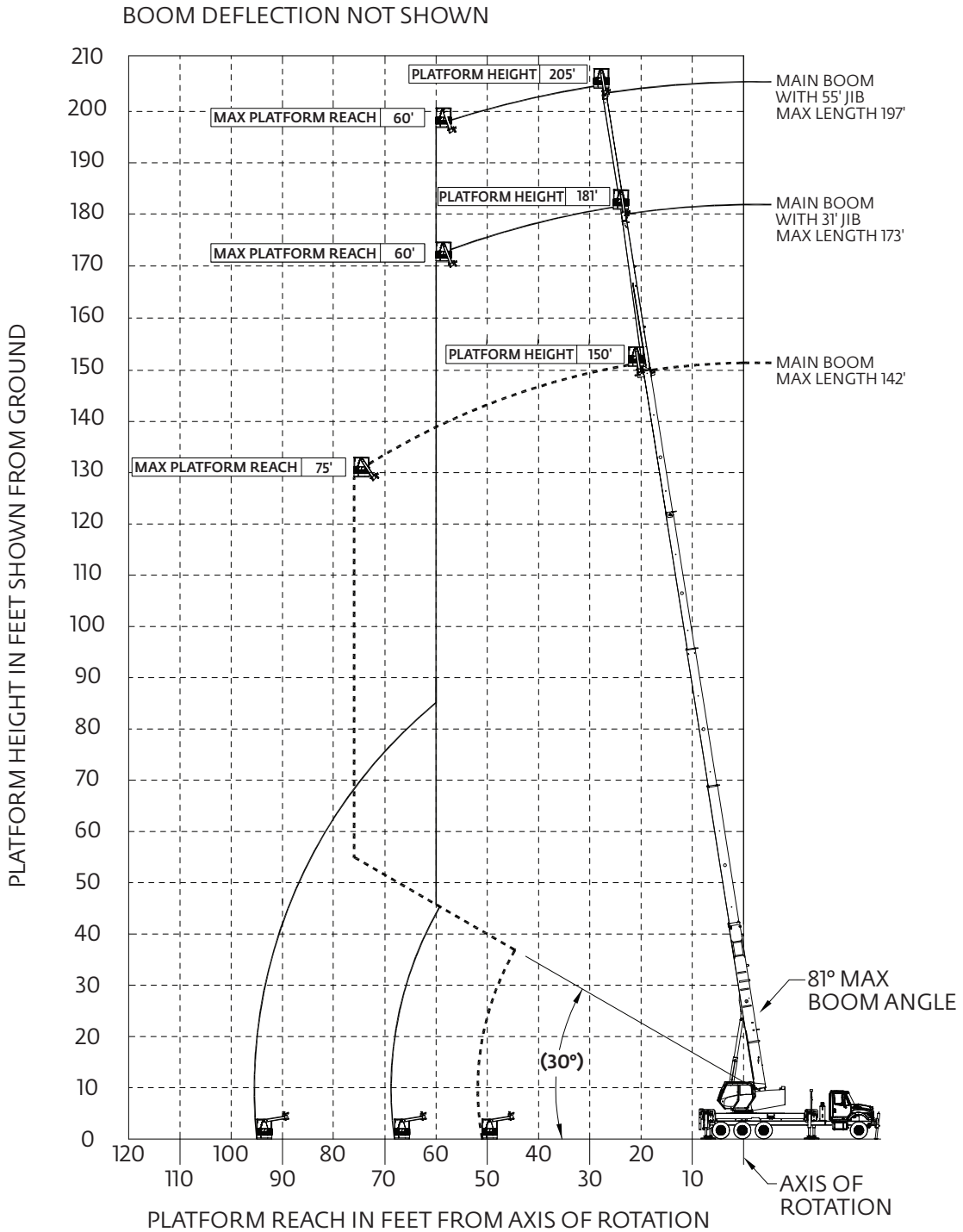

Please refer to page 51 of this product guide for important notes regarding the aerial reach diagrams.

THIS CHART IS ONLY A GUIDE AND SHOULD NOT BE USED TO OPERATE THE CRANE.
The individual crane's load chart, operating instructions and other instructional plates must be read and understood prior to operating the crane.

Load chart

NBT45142-1

10,36 m - 43,39 m (34 ft - 142 ft)

7,52 m (24.7 ft)

360°

Pounds

Radius in Feet	#01								
	Main Boom Length in Feet								
	34	47-A	61-B	74-C	88-D	101-E	115-F	128-G	142
7	90,000 (74.9)								
8	79,600 (73.1)								
10	68,200 (69.4)	40,000 (75.6)							
12	57,100 (65.7)	40,000 (73.1)	40,000 (77.4)						
15	44,750 (59.7)	40,000 (69.2)	39,500 (74.5)	35,200 (77.7)					
20	32,100 (48.9)	32,700 (62.3)	33,100 (69.5)	31,500 (73.7)	23,050 (76.7)	17,400 (78.8)			
25	24,300 (35.6)	24,950 (55.0)	25,300 (64.3)	25,550 (69.6)	20,700 (73.4)	15,750 (76.0)	13,000 (78.3)		
30	18,950 (13.5)	19,700 (46.9)	20,100 (58.8)	20,300 (65.2)	18,750 (70.0)	14,300 (73.1)	12,150 (75.8)	10,050 (78.0)	8000 (79.5)
35		15,900 (37.5)	16,300 (52.9)	16,500 (60.7)	16,700 (66.4)	13,200 (70.1)	11,150 (73.5)	9550 (75.8)	7600 (77.7)
40		13,000 (25.2)	13,400 (46.6)	13,650 (56.1)	13,850 (62.7)	12,200 (67.1)	10,400 (71.0)	9050 (73.7)	7450 (75.9)
45			11,200 (40.2)	11,400 (51.5)	11,550 (58.8)	11,100 (64.2)	9750 (68.4)	8550 (71.4)	7200 (74.0)
50			9250 (31.9)	9550 (46.2)	9700 (55.1)	9900 (60.9)	9100 (65.7)	8050 (69.1)	6800 (72.0)
55			7600 (20.7)	7900 (40.4)	8100 (50.9)	8250 (57.5)	8400 (62.9)	7600 (66.7)	6550 (70.0)
60				6550 (33.7)	6800 (46.4)	6900 (53.8)	7050 (59.9)	7100 (64.3)	6200 (67.9)
65				5450 (25.4)	5700 (41.5)	5800 (50.0)	5950 (56.7)	6100 (61.6)	5600 (65.6)
70				4500 (12.7)	4750 (36.0)	4900 (46.0)	5000 (53.5)	5150 (58.8)	5250 (63.4)
75					3950 (29.7)	4100 (41.7)	4200 (50.1)	4350 (55.9)	4450 (60.9)
80					3250 (21.7)	3400 (37.0)	3550 (46.5)	3650 (52.9)	3750 (58.3)
85					2600 (7.2)	2800 (31.6)	2950 (42.8)	3000 (49.8)	3100 (55.6)
90						2250 (25.3)	2400 (38.7)	2500 (46.5)	2550 (52.9)
95						1800 (16.6)	1900 (34.1)	2000 (43.1)	2100 (50.0)
100							1450 (29.0)	1600 (39.4)	1650 (47.0)
105							1100 (22.7)	1200 (35.4)	1300 (43.9)
110							750 (13.8)	800 (30.9)	900 (40.6)
Minimum boom angle (°) for indicated length (no load)						0	5	26.5	35.5
Maximum boom length (ft.) at 0° boom angle (no load)						88			

NOTE: ( ) Boom angles are in degrees.
#RCL operating code. Refer to RCL manual for operating instructions.

Lifting Capacities at Zero Degree Boom Angle									
Boom Angle	Main Boom Length in Feet								
	34	47-A	61-B	74-C	88-D	101-E			
0°	17,950 (31.5)	11,200 (44.5)	6,600 (58.5)	4,250 (71.5)	2,550 (85.5)	1,450 (98.5)			

NOTE: ( ) Reference radii in feet. 80097067

Rated Load Reductions from main boom capacity when lifting over main boom nose with:									
tele. erected (retracted)	2300	2150	2000	1950	1900	1850	1800	1750	1700
26' erected	1050	1000	950	925	900	900	875	875	850

THIS CHART IS ONLY A GUIDE AND SHOULD NOT BE USED TO OPERATE THE CRANE.
The individual crane's load chart, operating instructions and other instructional plates must be read and understood prior to operating the crane.

NBT45142-1

10,36 m - 43,39 m (34 ft - 142 ft) | Stowed | 7,52 m (24.7 ft) | 360°

Pounds

Radius in Feet	#02								
	Main Boom Length in Feet								
	34	47-A	61-B	74-C	88-D	101-E	115-F	128-G	142
7	89,200 (74.9)								
8	78,800 (73.1)								
10	67,400 (69.4)	39,350 (75.6)							
12	56,300 (65.7)	39,350 (73.1)	39,550 (77.4)						
15	43,950 (59.7)	39,350 (69.2)	39,050 (74.5)	34,800 (77.7)					
20	31,300 (48.9)	32,050 (62.3)	32,650 (69.5)	31,100 (73.7)	22,650 (76.7)	17,050 (78.8)			
25	23,500 (35.6)	24,300 (55.0)	24,850 (64.3)	25,150 (69.6)	20,300 (73.4)	15,400 (76.0)	12,700 (78.3)		
30	18,150 (13.5)	19,050 (46.9)	19,650 (58.8)	19,900 (65.2)	18,350 (70.0)	13,950 (73.1)	11,850 (75.8)	9800 (78.0)	7800 (79.5)
35		15,250 (37.5)	15,850 (52.9)	16,100 (60.7)	16,300 (66.4)	12,850 (70.1)	10,850 (73.5)	9300 (75.8)	7400 (77.7)
40		12,350 (25.2)	12,950 (46.6)	13,250 (56.1)	13,450 (62.7)	11,850 (67.1)	10,100 (71.0)	8800 (73.7)	7250 (75.9)
45			10,750 (40.2)	11,000 (51.1)	11,150 (58.8)	10,750 (64.2)	9450 (68.4)	8300 (71.4)	7000 (74.0)
50			8800 (31.9)	9150 (46.2)	9300 (55.1)	9550 (60.9)	8800 (65.7)	7800 (69.1)	6600 (72.0)
55			7150 (20.7)	7500 (40.4)	7700 (50.9)	7900 (57.5)	8100 (62.9)	7350 (66.7)	6350 (70.0)
60				6150 (33.7)	6400 (46.3)	6550 (53.8)	6750 (59.9)	6850 (64.3)	6000 (67.9)
65				5050 (25.4)	5300 (41.5)	5450 (50.0)	5650 (56.7)	5850 (61.6)	5400 (65.6)
70				4100 (12.7)	4350 (36.0)	4550 (46.0)	4700 (53.5)	4900 (58.8)	5050 (63.4)
75					3550 (29.7)	3750 (41.7)	3900 (50.1)	4100 (55.9)	4250 (60.9)
80					2850 (21.7)	3050 (37.0)	3250 (46.5)	3400 (52.9)	3550 (58.3)
85					2200 (7.2)	2450 (31.6)	2650 (42.8)	2750 (49.8)	2900 (55.6)
90						1900 (25.3)	2100 (38.7)	2250 (46.5)	2350 (52.9)
95						1450 (16.6)	1700 (34.1)	1750 (43.1)	1900 (50.0)
100							1150 (29.0)	1350 (39.4)	1450 (47.0)
105							700 (22.7)	950 (35.4)	1100 (43.9)
110							450 (13.8)	550 (30.9)	700 (40.6)
Minimum boom angle (°) for indicated length (no load)							0	25.6	36.9
Maximum boom length (ft.) at 0° boom angle (no load)							88		

NOTE: ( ) Boom angles are in degrees.
#RCL operating code. Refer to RCL manual for operating instructions.

Lifting Capacities at Zero Degree Boom Angle									
Boom Angle	Main Boom Length in Feet								
	34	47-A	61-B	74-C	88-D	101-E			
0°	17,150 (31.5)	10,550 (44.5)	6150 (58.5)	3850 (71.5)	2150 (85.5)	1100 (98.5)			

NOTE: ( ) Reference radii in feet.

80097068

THIS CHART IS ONLY A GUIDE AND SHOULD NOT BE USED TO OPERATE THE CRANE.
The individual crane's load chart, operating instructions and other instructional plates must be read and understood prior to operating the crane.

Load chart

NBT45142-1

9,45 m - 16,76 m (31 ft - 55 ft) | 7,52 m (24.7 ft) | 360°

Pounds

Radius in Feet	31 ft LENGTH
	#03
33	3400 (80)
50	3200 (75)
65	2700 (70)
79	2100 (65)
Min. boom angle for indicated length (no load)	51°
Max. boom length at 0° boom angle (no load)	88 ft

Radius in Feet	55 ft LENGTH
	#04
40	2200 (80)
59	2200 (75)
76	1600 (70)
91	1000 (65)
Min. boom angle for indicated length (no load)	60°
Max. boom length at 0° boom angle (no load)	74 ft

80097069

NOTE: ( ) Boom angles are in degrees.
#RCL operating code. Refer to RCL manual for operating instructions.

Boom extension capacity notes:

1. 31 ft and 55 ft extension lengths may be used for single line lifting service.
2. Radii listed are for a fully extended boom with the boom extension erected. For main boom lengths less than fully extended, the rated loads are determined by boom angle. For boom angles not shown, use the rating of the next lower angle.
   Warning: Operation of this machine with heavier loads than the capacities listed is strictly prohibited. Machine tipping with boom extension occurs rapidly and without advance warning.
3. Boom angle is the angle above or below horizontal of the longitudinal axis of the boom base section after lifting rated load.
4. Capacities listed are with outriggers properly extended and vertical jacks set.
5. When lifting over the main boom nose with 31 ft or 55 ft extension erected, the outriggers must be fully extended or 50% (17.5 ft) spread.

THIS CHART IS ONLY A GUIDE AND SHOULD NOT BE USED TO OPERATE THE CRANE.
The individual crane's load chart, operating instructions and other instructional plates must be read and understood prior to operating the crane.

NBT45142-1

43,29 m (142 ft) | 9,45 m - 16,76 m (31 ft - 55 ft) | 7,52 m (24.7 ft) | 360°

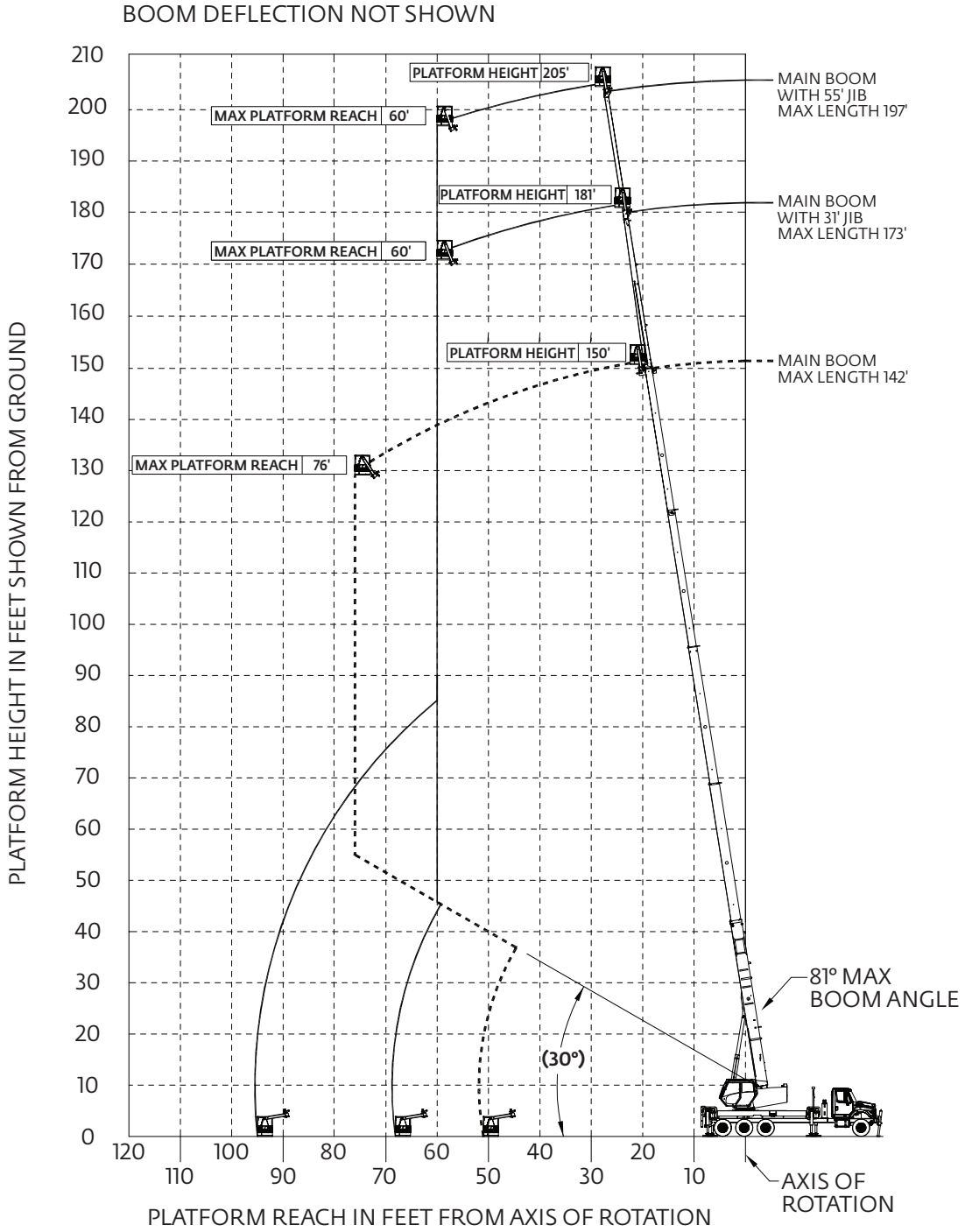

Please refer to page 51 of this product guide for important notes regarding the aerial reach diagrams.

THIS CHART IS ONLY A GUIDE AND SHOULD NOT BE USED TO OPERATE THE CRANE.
The individual crane's load chart, operating instructions and other instructional plates must be read and understood prior to operating the crane.

Load chart

NBT45161-1


49,1 m
(161 ft)


11,6 m
(38 ft)


7,52 m
(24.7 ft)


360°

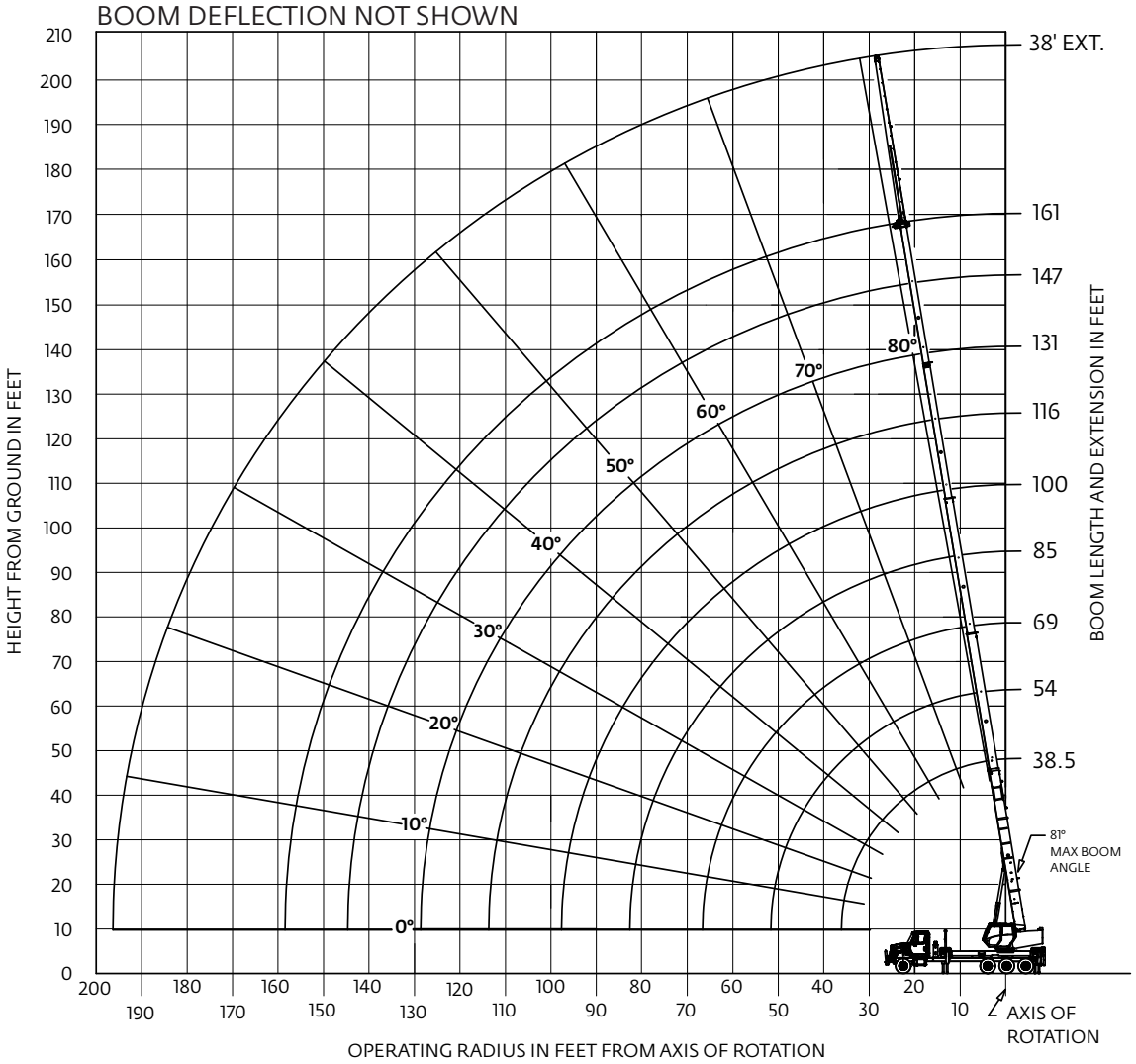

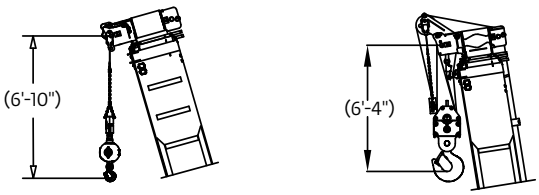

DIMENSIONS ARE FOR
LARGEST FURNISHED
HOOK BLOCK & HEADACHE
BALL, WITH ANTI-TWO
BLOCK ACTIVATED.

* DRAWING IS TO SHOW THE PHYSICAL REACH OF THE MACHINE. ALWAYS REFER TO LOAD CHART TO SEE WHAT PORTIONS OF THIS RANGE ARE STRUCTURALLY AND STABILITY LIMITED.

THIS CHART IS ONLY A GUIDE AND SHOULD NOT BE USED TO OPERATE THE CRANE.
The individual crane's load chart, operating instructions and other instructional plates must be read and understood prior to operating the crane.

NBT45161-1

11,73 m - 49,1 m (38.5 ft - 161 ft)

7,52 m (24.7 ft)

360°

Pounds

Radius in Feet	#01								
	Main Boom Length in Feet								
	38.5	54-A	69-B	85-C	100-D	116-E	131-F	147-G	161
6	90,000 (78.5)								
8	77,000 (75.4)								
10	65,500 (72.2)	25,650 (77.4)							
12	56,700 (69.0)	25,200 (75.2)	23,350 (78.8)						
15	44,400 (64.0)	24,750 (71.8)	22,950 (76.3)	21,250 (79.1)					
20	31,700 (55.1)	24,300 (66.0)	22,500 (72.0)	20,850 (75.8)	15,850 (78.3)				
25	23,900 (45.1)	22,050 (59.9)	20,350 (67.5)	18,750 (72.3)	14,250 (75.5)	10,000 (77.9)	7700 (79.7)		
30	18,650 (32.7)	17,350 (53.3)	16,100 (62.8)	14,850 (68.6)	12,900 (72.5)	9100 (75.5)	7200 (77.7)	5600 (79.3)	
35	14,750 (11.0)	13,950 (46.1)	12,950 (58.0)	12,000 (64.8)	11,250 (69.5)	8400 (72.9)	6600 (75.5)	5300 (77.5)	4000 (78.9)
40		11,350 (37.8)	10,600 (53.3)	9850 (61.2)	9200 (66.5)	7750 (70.4)	6150 (73.3)	5050 (75.6)	3900 (77.3)
45		9400 (28.6)	8850 (47.8)	8250 (57.2)	7700 (63.3)	7050 (67.7)	5800 (71.1)	4750 (73.7)	3750 (75.6)
50		7700 (12.2)	7400 (41.7)	6900 (52.9)	6500 (59.9)	6150 (65.0)	5400 (68.8)	4500 (71.8)	3550 (73.9)
55			6100 (34.7)	5750 (48.4)	5450 (56.5)	5100 (62.1)	4900 (66.5)	4200 (69.8)	3400 (72.2)
60			5000 (26.2)	4750 (43.6)	4500 (52.8)	4250 (59.1)	4100 (63.9)	3950 (67.8)	3250 (70.4)
65			4100 (13.0)	3950 (38.2)	3750 (49.0)	3550 (56.1)	3400 (61.4)	3300 (65.5)	2950 (68.6)
70				3250 (32.1)	3100 (45.0)	2950 (52.9)	2850 (58.7)	2750 (63.2)	2700 (66.7)
75				2650 (24.6)	2550 (40.6)	2450 (49.6)	2350 (56.0)	2300 (60.9)	2250 (64.6)
80					2100 (35.8)	2000 (46.1)	1950 (53.6)	1900 (58.5)	1850 (62.5)
85					1700 (30.3)	1650 (42.4)	1600 (50.3)	1550 (56.1)	1500 (60.3)
90					1300 (23.6)	1300 (38.4)	1250 (47.2)	1250 (53.6)	1200 (58.2)
95					1000 (14.0)	1000 (34.0)	1000 (44.0)	950 (50.9)	950 (55.9)
100						700 (29.0)	750 (40.6)	750 (48.3)	750 (53.6)
105						500 (23.0)	500 (37.0)	500 (45.4)	500 (51.2)
Minimum boom angle (°) for indicated length (no load)						23.0	37.0	45.4	51.2
Maximum boom length (ft) at 0° boom angle (no load)						100			

NOTE: ( ) Boom angles are in degrees.
#RCL operating code. Refer to RCL manual for operating instructions.

Lifting Capacities at Zero Degree Boom Angle									
Boom Angle	Main Boom Length in Feet								
	38.5	54-A	69-B	85-C	100-D				
0°	10,000 (36.0)	7000 (51.0)	3800 (66.5)	1900 (82.0)	800 (97.5)				

NOTE: ( ) Reference radii in feet. 80099594

Rated Load Reductions from main boom capacity when lifting over main boom nose with:									
38' Erected	2200	1950	1850	1750	1700	1650	1650	1600	1600

THIS CHART IS ONLY A GUIDE AND SHOULD NOT BE USED TO OPERATE THE CRANE.
The individual crane's load chart, operating instructions and other instructional plates must be read and understood prior to operating the crane.

Load chart

NBT45161-1

11,73 m - 49,1 m (38.5 ft - 161 ft)

Stowed

7,52 m (24.7 ft)

360°

Pounds

Radius in Feet	#02								
	Main Boom Length in Feet								
	38.5	54-A	69-B	85-C	100-D	116-E	131-F	147-G	161
6	89,150 (78.5)								
8	76,150 (75.4)								
10	64.650 (72.2)	25,050 (77.4)							
12	55,850 (69.0)	24,600 (75.2)	22,900 (78.8)						
15	43,550 (64.0)	24,150 (71.8)	22,500 (76.3)	20,850 (79.1)					
20	30,850 (55.1)	23,700 (66.0)	22,050 (72.0)	20,450 (75.8)	15,550 (78.3)				
25	23,050 (45.1)	21,450 (59.9)	19,900 (67.5)	18,350 (72.3)	13,950 (75.5)	9700 (77.9)	7450 (79.7)		
30	17,800 (32.7)	16,750 (53.3)	15,650 (62.8)	14,450 (68.6)	12,600 (72.5)	8800 (75.5)	6950 (77.7)	5350 (79.3)	
35	13,900 (11.0)	13,350 (46.1)	12,500 (58.0)	11,600 (64.8)	10,950 (69.5)	8100 (72.9)	6350 (75.5)	5050 (77.5)	3800 (78.9)
40		10,750 (37.8)	10,150 (53.3)	9450 (61.2)	8900 (66.5)	7450 (70.4)	5900 (73.3)	4800 (75.6)	3700 (77.3)
45		8800 (28.6)	8400 (47.8)	7850 (57.2)	7400 (63.3)	6750 (67.7)	5550 (71.1)	4500 (73.7)	3550 (75.6)
50		7100 (12.2)	6950 (41.7)	6500 (52.9)	6200 (59.9)	5850 (65.0)	5150 (68.8)	4250 (71.8)	3350 (73.9)
55			5650 (34.7)	5350 (48.4)	5150 (56.5)	4800 (62.1)	4650 (66.5)	3950 (69.8)	3200 (72.2)
60			4550 (26.2)	4350 (43.6)	4200 (52.8)	3950 (59.1)	3850 (63.9)	3700 (67.8)	3050 (70.4)
65			3650 (13.0)	3550 (38.2)	3450 (49.0)	3250 (56.1)	3150 (61.4)	3050 (65.5)	2750 (68.6)
70				2850 (32.1)	2800 (45.0)	2650 (52.9)	2600 (58.7)	2500 (63.2)	2500 (66.7)
75				2250 (24.6)	2250 (40.6)	2150 (49.6)	2100 (56.0)	2050 (60.9)	2050 (64.6)
80					1800 (35.8)	1700 (46.1)	1700 (53.6)	1650 (58.5)	1650 (62.5)
85					1400 (30.3)	1350 (42.4)	1350 (50.3)	1300 (56.1)	1300 (60.3)
90					1000 (23.6)	1000 (38.4)	1000 (47.2)	1000 (53.6)	1000 (58.2)
95					700 (14.0)	700 (34.0)	750 (44.0)	700 (50.9)	750 (55.9)
100							500 (40.6)	500 (48.3)	550 (53.6)
Minimum boom angle (°) for indicated length (no load)						23.0	37.0	45.0	51.0
Maximum boom length (ft.) at 0° boom angle (no load)						100			

NOTE: ( ) Boom angles are in degrees.
#RCL operating code. Refer to RCL manual for operating instructions.

Lifting Capacities at Zero Degree Boom Angle									
Boom Angle	Main Boom Length in Feet								
	38.5	54-A	69-B	85-C	100-D				
0°	9150 (36.0)	6400 (51.0)	3350 (66.5)	1500 (82.0)	500 (97.5)				

NOTE: ( ) Reference radii in feet.

80099595

THIS CHART IS ONLY A GUIDE AND SHOULD NOT BE USED TO OPERATE THE CRANE.
The individual crane's load chart, operating instructions and other instructional plates must be read and understood prior to operating the crane.

NBT45161-1

11,6 m (38 ft) 7,52 m (24.7 ft) 360°

Pounds

Radius in Feet	38 ft LENGTH
	#06
41	2300 (80)
61	2200 (75)
79	1650 (70)
94	1000 (65)
Min. boom angle for indicated length (no load)	60°
Max. boom length at 0° boom angle (no load)	69 ft

80099596

Boom extension capacity notes:

1. 38 ft extension lengths may be used for single line lifting service.
2. Radii listed are for a fully extended boom with the boom extension erected. For main boom lengths less than fully extended, the rated loads are determined by boom angle. For boom angles not shown, use the rating of the next lower angle.
   Warning: Operation of this machine with heavier loads than the capacities listed is strictly prohibited. Machine tipping with boom extension occurs rapidly and without advance warning.
3. Boom angle is the angle above or below horizontal of the longitudinal axis of the boom base section after lifting rated load.
4. Capacities listed are with outriggers properly extended and vertical jacks set.
5. When lifting over the main boom nose with 38 ft extension erected, the outriggers must be fully extended or 50% (17.5 ft) spread.

THIS CHART IS ONLY A GUIDE AND SHOULD NOT BE USED TO OPERATE THE CRANE.
The individual crane's load chart, operating instructions and other instructional plates must be read and understood prior to operating the crane.

Aerial reach diagram

NBT45161-1

49,1 m (161 ft) | 11,6 m (38 ft) | 7,52 m (24.7 ft) | 360°

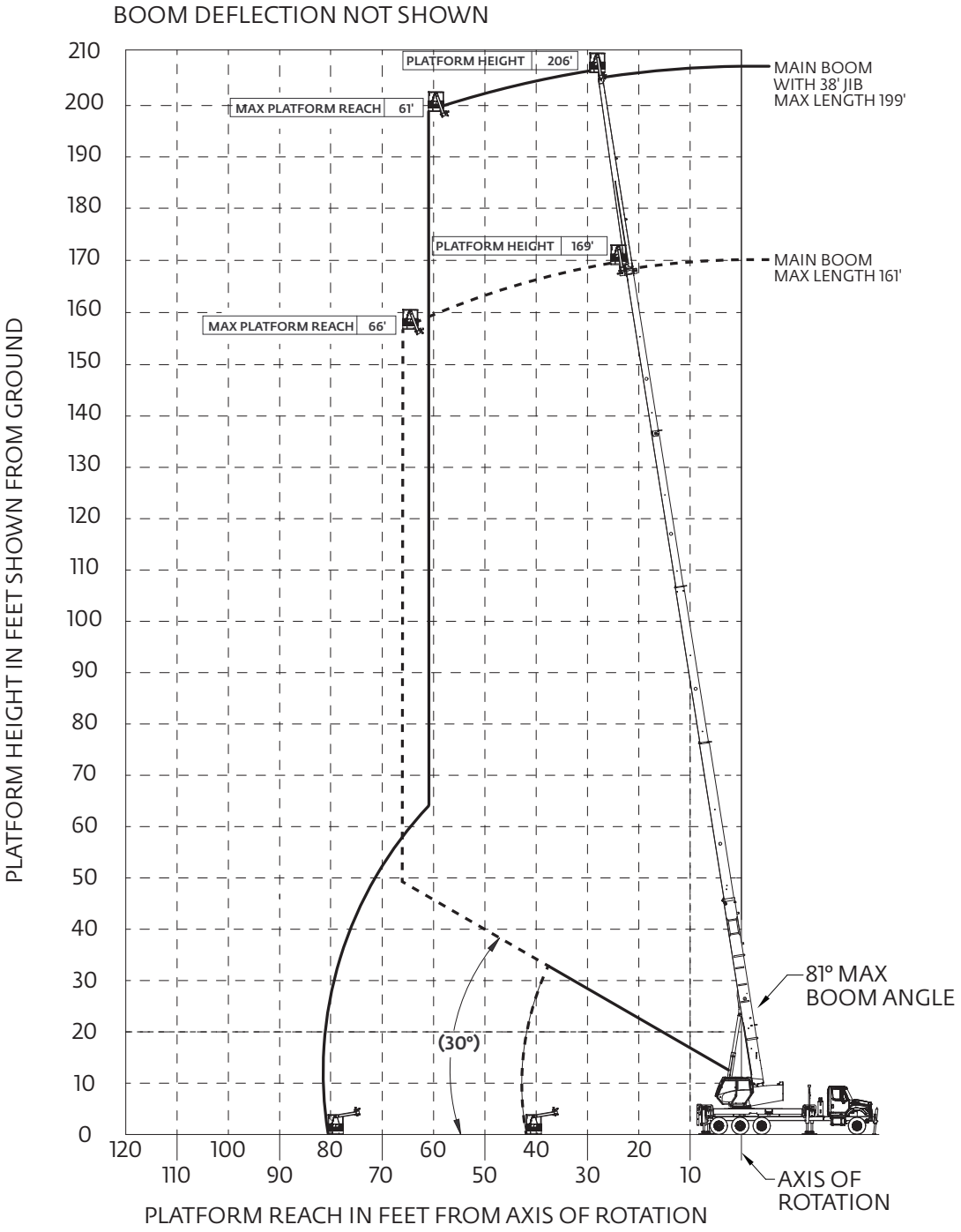

Please refer to page 51 of this product guide for important notes regarding the aerial reach diagrams.

THIS CHART IS ONLY A GUIDE AND SHOULD NOT BE USED TO OPERATE THE CRANE.
The individual crane's load chart, operating instructions and other instructional plates must be read and understood prior to operating the crane.

Notes: Recommended truck specifications

Many factors must be considered in the selection of proper truck for an NBT40-1 crane. Items which must be considered are:

1. Axle Rating. Axle ratings are determined by the axles, tires, rims, springs, brakes, steering and frame strength of the truck. If any one of these components is below the required rating, the gross axle rating is reduced to its weakest component value.
2. Wheelbase (WB), Cab-to-Trunnion (CT) and Bare Chassis Weight. The wheelbase, CT and chassis weights shown are required so the basic NBT40-1 can be legally driven in most states and meet stability requirements. The dimensions given assume the sub-base is installed properly behind the truck cab. If exhaust stacks, transmission protrusions, etc., do not allow a close installation to the cab, the WB and CT dimensions must be increased. Refer to the Mounting Configuration pages for additional information.
3. Truck Frame. Try to select a truck frame that will minimize or eliminate frame reinforcement or extension of the after frame (AF). Many frames are available that have the necessary after frame (AF) section modulus (SM) and resistance to bending moment (RBM) so that reinforcing is not required. The front hydraulic jack is used for a 360° working range around the truck. The frame under the cab through the front suspension must have the minimum S.M. and RBM because reinforcing through the front suspension is often difficult because of engine, radiator mounts and steering mechanics. See "Truck Requirements" and "Frame Strength" pages for the necessary section modulus and resistance to bending moment values. Integral extended front frame rails are required for front center stabilizer installation.
4. Additional Equipment. In addition to the axle ratings, wheelbase, cab-to-axle requirements and frame, it is recommended that the truck is equipped with electronic engine control, increased cooling and a transmission with a PTO opening available with an extra heavy duty PTO. A conventional cab truck should be used for standard crane mounts.
5. Neutral Start Switch. The chassis must be equipped with a switch that prevents operation of the engine starter when the transmission is in gear.

Notes:

- Gross Vehicle Weight Rating (GVWR) is dependent on all components of the vehicle (axles, tires, springs, frame, etc.) meeting manufacturers' recommendations; always specify GVWR when purchasing trucks
- Diesel engines require a variable speed governor for smooth crane operation; electronic fuel injection requires EET engine remote throttle
- All mounting data is based on a NBT40-1 Series with an 85% stability factor
- The complete unit must be installed in accordance with factory requirements, and a test performed to determine actual stability and counterweight requirements per SAE J765; contact the factory for details

Notes: Aerial reach diagrams

General:
Before using the controls, the operator must be familiar with the warning and safety instructions of the equipment, aerial work platform and proper work practices.

1. Personnel in the platform must adhere to the instructions, warnings, cautions and dangers described on the decals located on the equipment and platform.
2. This equipment and platform are NOT INSULATED.
3. Fall protection devices must be worn by each occupant in the platform.
4. Each fall protection lanyard must be individually attached to a designated anchor point. Attach only one lanyard per anchor point.
5. Additional safety equipment such as hard hat, eye protection and foot protection shall be worn in accordance to company and jobsite requirements
6. Do not exceed the allowable platform capacity and reach.
7. All boom movements must be performed slowly and deliberately. Abrupt controls operation will result in abrupt movements.
8. When handling personnel, the requirements of the applicable national, state, and local regulations and safety codes must be met.
9. Handling of personnel is only permitted with full extension of all outrigger beams. Use only National Crane approved boom attached platforms.
10. If using an offsettable extension, do not use platform with extension deployed at 30° offset.
11. The maximum outrigger pad load is 42,000 lb (for minimum chassis requirement).

Specifications

Super Structure

Boom

Four boom length options:

• 9,45 m- 31,39 m (31 ft – 103 ft), four-section with a maximum tip height of 33,8 m (111 ft). Available on NBT36-1, NBT40-1, NBT45-1.

• 9,45 m- 38,71 m (31 ft – 127 ft), five-section with a maximum tip height of 41,1 m (135 ft). Available on NBT36-1, NBT40-1, NBT45-1.

• 10,36 m- 43,29 m (34 ft – 142 ft), five-section with a maximum tip height of 45,7 m (150 ft). Available on NBT36-1, NBT40-1, NBT45-1.

• 11,73 m- 49,1 m (38.5 ft – 161 ft), five-section with a maximum tip height of 51,5 m (169 ft). Available on NBT45-1.

Includes proportional extension via multi-stage hydraulic cylinder and cable operation, four-plate, high-strength steel construction, three-sheave, quick reeve boom nose and Easy-glide wear pads.

Boom elevation

One (1) double-acting, hydraulic cylinder with integral holding valve with integral pressure transducers provides elevation from -10º to 81º.

Rated Capacity Limiter (RCL) and anti-two block (ATB) systems

Graphical Display Capacity Limiter and anti-two block system with audio visual warning and crane function lockout. Includes 145 mm (5.7 in), monochrome screen for real-time display of boom angle, length, radius, tip height, maximum permissible load, load indication and warning of impending overload or anti-two-block condition. Work Area Definition System (WADS) allowing operator definable non-lockout warning limits for crane operations and CAN bus sensors and hard-wired ATB circuit routed externally to the boom. Outrigger monitoring system (OMS) to sense the configuration of the outriggers and aide the operator in selecting an appropriate setup. On-board setup and diagnostics for RCL sensors allowing for improved service and an event recorder to protect your investment.

Operator cab and controls

Rigid galvanealed steel cab structure, well insulated, offering optimum operator visibility and comfort. Equipped with: tinted safety glass, fixed front window with windshield wiper and washer, sliding skylight window with windshield wiper, sliding left side glass door, sliding right side window for ventilation with safety grille, tilting rear window for ventilation, four-way adjustable, cushioned seat and armrests with seat belt, diesel-fired warm-water heater with air ducts at operators feet, left side of cab and front dash - standard, hydraulic-powered air conditioner - standard, travel swing lock, circulation fan, bubble level, adjustable sun visor, dome light, cup holder, fire extinguisher, load chart binder with tear-proof paper load charts and operator manual.

Armrest control functions are arranged per compliant with ASME B30.5: Two single axis hydraulic joystick controllers for: swing, boom telescope, main hoist, auxiliary hoist (optional), boom lift, warning horn button, swing park brake switch, hoist rotation indicator, main hoist, hoist rotation indicator, auxiliary hoist (optional).

Outrigger controls: Hand held control pendant with umbilical cable to allow the operator to best view the outriggers during setup.

Foot controls include: engine throttle (electronic), dynamic swing brake (hydraulic) and boom telescope (if equipped with auxiliary hoist option.)

Front console includes controls and indicators for: Rated Capacity Limiter display, engine ignition key, emergency stop switch, engine throttle lock for maintaining an engine speed, RCL override keyswitch (momentary), engine warning, high hydraulic oil temperature, main hoist high/low speed switch, main hoist 3rd wrap, auxiliary hoist high/low speed switch (optional), auxiliary hoist 3rd wrap (optional), hydraulic tool circuit ON/OFF switch (optional), 12VDC emergency power outlet.

Overhead console includes controls and indicators for: heater, A/C and fan speed, windshield wiper and washer, skylight wiper, cab-mounted work lights, crane function power, radio remote power, emergency lowering system.

Hydraulic system

Efficient closed-center, load sense hydraulics system featuring load sharing technology allowing for smooth multifunction operation of all crane functions. One (1) SAE-C mounted, 130cc axial piston pump for all functions and optimized system performance. Shaft input of 2200 RPM generating 286 lpm (76 gpm) max flow at 320 bar (4600 psi) max operating pressure. 351 L (100 gal) hydraulic reservoir with SAE o-ring connections and integrated butterfly shut-off valve for easy maintenance. SAE o-ring hydraulic fittings and hoses throughout. Boom lift, boom telescope, main and aux hoist(s) and vertical outrigger jacks are all equipped with counterbalance valves for controlled movement and load holding.

Hydraulic oil cooler: standard electric fan, plate and fin style oil cooler mounted to the boom rest to remove heat from the hydraulic oil under heavy operating conditions.

Slewing

Continuous 360° rotation using (1) low speed high torque motor with a manually adjustable swing adjustment valve integrated to the hydraulic motor control manifold mounted to a planetary reduction gear. A proportional hydraulic brake pedal located in the operator cab allows for the dynamic application of the multi-disk swing brake circuit. A separate spring-applied, hydraulic-released brake for disabling rotation can be activated from the left hand seat armrest. Free-swing functionality is disabled when using the optional crane radio remote control or when the ANSI A92.2 aerial work platform package is equipped and in-use. Maximum rotation speed of 2 RPM.

Electrical system

Automotive grade, fully wire harnessed 12VDC electrical system using state of the art sealed connectors and control modules. Dual-tone backup and outrigger motion alarm located at rear of machine. LED marker and triple ID lights.

Lower

Outriggers

Out and down style outriggers at both the front and rear with individual control of each horizontal beam extension and vertical jack cylinder. Ground level control stations located at the left and right side for all vertical jacks and only the horizontal beams for each station. Operator cab control station features a wired pendant to control all outrigger functions.

Full-span: 7,50 m (24.6 ft)

Mid-span: 5,34 m (17.5 ft)

Retracted-span: 2,0 m (6.6 ft)

Outrigger monitoring system for horizontal beam extension is standard. Inverted cylinder rods for vertical outrigger jack cylinders for best protection of chromed rod. Optional single front outrigger (SFO) required for stability on certain mounting configurations.

Chassis Mounting

Torsion resistant, high-strength steel sub frame attached using high-strength steel mounting brackets that are welded to the sub-frame and bolted to the truck chassis using Huck® bolts to ensure a secure and maintenance-free connection. Rear bumper under ride protection standard on factory-mounted cranes. Fixed boom rest mounted to front outrigger box and fabricated from structural steel.

Optional items

- **Aerial work platform package**
  - > (2) person steel, non-insulated, yoke-style platform with a capacity of 544,3 kg (1200 lb) on main boom and 272,2 kg (600 lb) on jib
  - > Operating Envelope: Platform reach up to 23,2 m (76 ft) with the 43,29 m (142 ft) boom option. Platform height up to 62,8 m (206 ft) with the 49,1 m (161 ft) boom option
  - > 12VDC emergency power unit: allows temporary control of all functions in the event of an engine failure or other emergency from both the ground controls and platform control station
  - > Wireless radio remote platform controls: LCD display providing operating information such as platform reach, platform height and utilization. Hardwired foot switch for operator presence detection
- **Aerial work package & radio remotes "ready" option**
  - > Optimum flexibility for your investment
  - > All hydraulic valves and electrical provisions are factory pre-installed allowing an upgrade to these utilization enhancing options at a later date
- **Hydraulic tool circuit for aerial work platform**
  - > Hydraulic accessory manifold: provides hydraulic oil to the hose reel of 124 bar (1800 PSI) pressure at 22,7 lpm (6 gpm)
  - > Boom mounted hydraulic hose reel: twin-line, spring-tensioned hose reel allowing oil to flow to the platform when attached to either the main boom or the jib. All hoses equipped with quick-disconnects and the hoses can be easily stowed to the main boom when not in use.
  - > Pressure intensifier manifold in platform: Hydraulic power on demand for platform tools. Manifold can provide hydraulic oil up to 689,5 bar (10,000 PSI) at 0,95 lpm (0.25 gpm)
- **Operator aids**
  - > 5-function wireless radio remote control of approximately 75 m (250 ft) (NB5R)
  - > Metric capacity charts
  - > Spanish, Brazilian Portuguese, French documentation and decals
- **Telescopic Jib**
  - > 9,4 m – 16,7 m (31 ft - 55 ft) telescoping boom extension (side fold for stowing), includes 7,3 m (24 ft) manual pull out section
  - > Optional for the 38,7 m (127 ft) & 43,3 m (142 ft) booms only
  - > Max tip height with 38,7 m (127 ft) boom is 57,6 m (189 ft)
  - > Max tip height with 43,3 m (142 ft) boom is 62,2 m (204 ft)
  - > RCL calibration for future jib option
- **Auxiliary hoist**
  - > A second boom-mounted hoist located in front of the standard main hoist
  - > Standard with rotation resistant wire rope and round, top-swivel downhaul weight
- **Fixed Jib**
  - > 11,6 m (38 ft) fixed boom extension (side fold for stowing
  - > Optional for the 49,1 m (161 ft) boom only)
  - > Max tip height with 49,1 m (161 ft) boom is 62,8 m (206 ft)
  - > RCL calibration for future jib option
- **Extended sub-frame**
  - > Lower torsion resistant sub-frame extension of 1,3 m (52 in)
  - > Equipped to provide a more optimized truck layout for some truck configurations
  - > Hydraulic reservoir is relocated to behind the boom rest (closer to the crane cab)
  - > Possibility of no SFO requirement on some truck layout configurations
- **Wide decking**
  - > Available for 2,59 m (102 in) width rear axle trucks
- **K100™ synthetic rope**
  - > 18 mm (0.71 in) 137,2 m (450 ft) K-100 synthetic hoist rope (in lieu of std. rope)
  - > Available for either main, auxiliary or both hoists
  - > 80% lighter than steel wire rope with same available line-pull
  - > Easy handling/reeving and installation
  - > Reduces number of change outs due to mitigation of kinking, bird-caging, or damage from diving
  - > Corrosion resistant – no rusting, no lubrication requirements
- **Hook blocks**
  - > Single sheave, 18,1 t (20 USt) quick-reeve hook block for 2-3 part reeving. [186 kg (410 lb)]
  - > Double sheave, 22,7 t (25 USt) quick-reeve hook block for 4-5 part reeving [290 kg (639 lb)]
  - > Triple sheave, 36,3 t (40 USt) quick-reeve hook block for 6-7 part reeving including auxiliary sheave case assembly [272 kg (600 lb)]
  - > Quad sheave, 45,4 t (50 USt) quick-reeve hook block for 8 part reeving including auxiliary sheave case assembly [361 kg (796 lb)]
- **Single front outrigger**
  - > 63,5 m (25 in) vertical stroke
  - > Required for stable operation with some mounting configurations
- **Aluminum outrigger floats**
  - > 610 mm (24 in) aluminum floats in lieu of the standard 500 mm (19.7 in) polymeric floats

Main and (optional) auxiliary hoist(s)

Two-speed displacement, bent-axis piston motor driving a planetary gearset and a grooved drum with cable tensioner/follower and drum rotation indicator.

Parts of Line	1 part line	2 part line	3 part line	4 part line	5 part line	6 part line	7 part line	8 part line
Max boom length (ft) at max elevations with stated rigging and load block and ground level	206 (includes 45 ft ext.)	142	103	81	66	55	47	40
Low speed lift (lb)	11,250	22,500	33,750	45,000	56,250	67,500	78,750	90,000
High speed lift (lb)	5000	10,000	15,000	20,000	25,000	30,000	35,000	40,000

Line Pulls and Reeving Information			
Hoists	**Cable specs.**	**Permissible line pulls**	**Nominal cable length**
Main	16 mm (5/8 in) Dyform 34 LR Rotation Resistant (non-rotating) Min. Breaking Strength 56,420 lb	11,280 lb*	450 ft
Main and Auxiliary	16 mm (5/8 in) 6x19 Class EEIPS, IWRC Min. Breaking Strength 45,400 lb	11,280 lb*	450 ft
Main and Auxiliary	18 mm Synthetic K-100™ Hoist Rope (ISO) Min. Breaking Strength 63,700 lb	12,740 lb*	463 ft

The approximate weight of 5/8 in wire rope is 1.0 lb/ft.
The approximate weight of 18 mm synthetic rope is 0.16 lb/ft.
*With certain boom and hoist tackle combinations, the allowable line pull may be limited by hoist performance. Refer to Hoist Performance table for lift planning to ensure adequate hoist performance on drum rope layer required.

Hoist Performance				
Wire rope layer	Hoist line pulls		Drum capacity (ft)	
	Two speed hoist			
	Low	High	Layer	Total
	Available lb	Available lb		
1	15,000	7516	82	82
2	13,529	6765	92	174
3	12,299	6150	101	275
4	11,275	5637	110	385
5	10,407	5204	119	504

**Refer to Line Pulls and Reeving Information table for max. lifting capacity of wire rope.*

Synthetic rope layer height may vary and may reduce available line pull per layer.

Weight Reductions for Load Handling Devices	
Auxiliary boom nose	45 kg (100 lb)
Hook blocks and headache balls	
50 USt, 4-sheave (12 in sheave)	361 kg (796 lb)+
40 USt, 3-sheave (12 in sheave)	272.2 kg (600 lb)+
25 USt, 2-sheave (12 in sheave)	290 kg (640 lb)+
20 USt, 1-sheave (12 in sheave)	149 kg (329 lb)+
7 USt overhaul ball	78 kg (172 lb)+

+ Refer to rating plate for actual weight

When lifting over boom extension, deduct total weight of all load handling devices reeved over main boom nose directly from boom extension capacity.

NOTE: All load handling devices and boom attachments are considered part of the load and suitable allowances MUST BE MADE for their combined weights. Weights are for Manitowoc furnished equipment.

Symbols glossary


Axles


Drive


Heavy duty jib


Radius


Boom


Electrical system


Hoist


Rotation


Boom elevation


Engine


Hookblock


Speed


Boom extension


Hydraulic system


Steering


Boom length


Frame


Insert


Suspension


Boom nose


Fuel tank capacity


Lights


Swing


Brakes


Gear


Oil


Tires


Operators station


Grade


Outrigger controls


Transmission


Counterweight


Height (no max)


Outriggers

Notes

Notes

Notes

Manitowoc Cranes

Regional headquarters

Americas
Manitowoc, Wisconsin, USA
Tel: +920 684 4410
Fax: +1 920 652 9778

Shady Grove, Pennsylvania, USA
Tel: +1 717 597 8121
Fax: +1 717 597 4062

Europe and Africa
Dardilly, France - TOWERS
Tel: +33 (0)4 72 18 20 20
Fax: +33 (0)4 72 18 20 00

Wilhelmshaven, Germany - MOBILE
Tel: +49 (0) 4421 294 0
Fax: +49 (0) 4421 294 4301

China
Shanghai, China
Tel: +86 21 6457 0066
Fax: +86 21 6457 4955

Middle East and Greater Asia-Pacific
Singapore
Tel: +65 6264 1188
Fax: +65 6862 4040

Dubai, UAE
Tel: +971 4 8862677
Fax: +971 4 8862678/79

Manitowoc Crane Care™

Manitowoc Finance™

Form No. NBT40-1
Part No. 17-013-1M-1017

www.manitowoc.com